ABB Industry Oy Drives Comp AC	ACS150 HW Hint Instruction for obtaining 0-10V to analog input (AI)				
Departm. EGX	Date 26.01.2006	Made by Lucy Lu	Revision A	Approved Leo Annala	Page 1 of 1

1. Introduction

The use of an external potentiometer requires an external voltage supply for ACS150. The drive has internal +24*V* voltage supply which is used only for the inputs / outputs and not for the AI. With help of this instruction it is possible to use 24*V* voltage supply for drives analog input (AI).

2. Instructions for using +24V to control AI

On I/O control board, there is 24*V* available; therefore 0-10*V* can be obtained from 24*V* to AI by using a simple external circuit. See an example of the connection below:

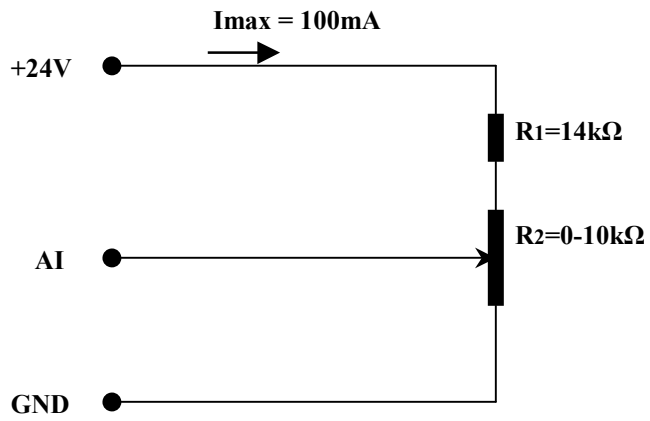

- 100mA is the maximum current of 24*V* voltage supply.
- One 14*kΩ* (R1) resistor is connected to 24*V* terminal
- One 10*kΩ* (R2) potentiometer is connected in series between 14*kΩ* resistor and GND.

3. Calculation method

The resistance value of the example circuit is using the 1*mA* current from voltage supply. When the potentiometer value 10*kΩ* is selected, R1 (14*kΩ*) can be calculated by using the values of current and R2.

For example: $24V = IR_1 + IR_2 \Rightarrow R_1 = \frac{24}{I} - R_2 = \frac{24V}{0{,}001A} - 10k\Omega = 14k\Omega$

$U_{AI} = 24V - I(R_1 + R_2) \Rightarrow$ if $R_2 = 0\Omega$, $U_{AI} = 10V$; if $R_2 = 10k\Omega$, $U_{AI} = 0V$.

Note! Other values of R1 and R2 can also be used in the circuit and calculated the same way. Use only suitable resistor types. The resistor circuit should not consume more than 100*mA*.