ABB industrial drives

Hardware manual
ACQ810 drive modules
(200 to 400 kW, 250 to 600 hp)

Power and productivity
for a better world™

List of related manuals

Drive hardware manual and guide	Code (English)	
ACQ810-04 hardware manual (200 to 400 kW)	*3AUA0000055155*	1)
ACQ810-04 quick start-up guide	*3AUA0000055159*	2)

Drive firmware manual		
ACQ810 standard pump control program firmware manual	*3AUA0000055144*	1)

Option manuals and quides		
ACS-CP-U control panel IP54 mounting platform kit (+J410) installation guide	*3AUA0000049072*	3)
Manuals and quick guides for I/O extension modules, fieldbus adapters, etc.		1)

1) Delivered in PDF format on a manuals CD with the drive module.

2) Delivered as a printed copy with the drive module.

3) Delivered as a printed copy with the option.

All manuals are available in PDF format on the Internet. See section *Document library on the Internet* on the inside of the back cover.

Hardware manual

ACQ810-04 drive modules
(200 to 400 kW, 250 to 600 hp)

Table of contents

Safety instructions

Mechanical installation

Electrical installation

Start-up

© 2009 ABB Oy. All Rights Reserved.

3AUA0000055155 Rev A
EN
EFFECTIVE: 2009-09-15

Table of contents

List of related manuals 2

1. Safety instructions

What this chapter contains 11
Use of warnings 11
Safety in installation and maintenance 12
Electrical safety 12
Grounding 13
General safety 14
Fiber optic cables 15
Printed circuit boards 15
Safe start-up and operation 15
General safety 15

2. Introduction to the manual

What this chapter contains 17
Target audience 17
Contents of the manual 17
Related manuals 18
Categorization by option code 18
Quick installation, commissioning and operating flowchart 18
Terms and abbreviations 20

3. Operation principle and hardware description

What this chapter contains 21
Product overview 21
Layout 23
Alternative output busbar configurations 25
Control unit variants 25
Component placement 26
Power connections and control interfaces 27
Cables for connecting the control unit to the drive module and control panel 28
Circuit boards 28
Type designation label 28
Type designation key 29

4. Planning the cabinet installation

What this chapter contains 31
Basic requirements for the cabinet 31
Planning the layout of the cabinet 32
Layout examples, door closed 32
Layout examples, door open 33
Arranging the grounding inside the cabinet 34
Selecting busbar material and preparation of the joints 34
Tightening torques 34
Planning the fastening of the cabinet 34

Planning the cabinet placement on a cable channel 35
Planning the Electro Magnetic Compatibility (EMC) of the cabinet 35
Planning the grounding of the cable shields at the cabinet lead-through 37
Planning the cooling 37
Preventing the recirculation of hot air 39
Prevention the air recirculation outside the cabinet 39
Prevention the air recirculation inside the cabinet 39
Required free space around the drive module 39
Free space at top with high air inlet gratings in the cabinet door 40
Free space at top with low air inlet gratings in the cabinet door 40
Free space at the side and front of the drive module 41
Other installation positions 41
Planning the placement of the control panel 42
Planning the use of cubicle heaters 42

5. Mechanical installation

What this chapter contains 43
Safety 44
Checking the installation site 44
Required tools 44
Moving and unpacking the unit 45
Checking the delivery 45
Attaching the warning stickers 46
Fastening the cable lug terminals to the output busbars 46
Fastening the drive module to the cabinet base 48
Installing the drive control unit 49
Mounting through the fastening holes 49
Vertical DIN rail mounting 50
Horizontal DIN rail mounting 50

6. Planning the electrical installation

What this chapter contains 51
Selecting the supply disconnecting device (disconnecting means) 51
European Union 52
Other regions 52
Selecting and dimensioning the main contactor 52
Protecting the motor insulation and bearings 52
Checking the compatibility of the motor and drive 52
Requirements table 53
Explosion-safe (EX) motors 54
High-output motors and IP 23 motors 55
HXR and AMA motors 55
ABB motors of types other than M2_, M3_, HX_ and AM_ 55
Calculating the rise time and the peak line-to-line voltage 55
Sine filters 56

Selecting the power cables . . . 56
General rules . . . 56
Typical power cable sizes . . . 57
Typical power cable sizes (US) . . . 57
Alternative power cable types . . . 58
Motor cable shield . . . 58
Additional US requirements . . . 58
Conduit . . . 59
Armored cable / shielded power cable . . . 59
Selecting the control cables . . . 59
Shielding . . . 59
Signals in separate cables . . . 59
Signals allowed to be run in the same cable . . . 59
Relay cable type . . . 60
Control panel cable length and type . . . 60
Routing the cables . . . 60
Separate control cable ducts . . . 61
Continuous motor cable shield or enclosure for equipment in the motor cable . . . 61
Implementing thermal overload and short-circuit protection . . . 62
Protecting the drive and input power cable in short-circuits . . . 62
Protecting the motor and motor cable in short-circuits . . . 62
Protecting the drive and the input power and motor cables against thermal overload . . . 62
Protecting the motor against thermal overload . . . 63
Protecting the drive against ground faults . . . 63
Residual current device compatibility . . . 63
Implementing the Emergency stop function . . . 63
Implementing the Safe torque off function . . . 64
Implementing the Power-loss ride-through function . . . 65
Using power factor compensation capacitors with the drive . . . 65
Using a contactor between the drive and the motor . . . 65
Implementing a bypass connection . . . 66
Protecting the contacts of relay outputs . . . 67
Connecting a motor temperature sensor to the drive I/O . . . 68
Considering the PELV on installation sites above 2000 meters (6562 feet) . . . 68
Example circuit diagram . . . 69

7. Electrical installation

What this chapter contains . . . 71
Warnings . . . 71
Checking the insulation of the assembly . . . 71
Drive . . . 71
Input power cable . . . 71
Motor and motor cable . . . 72
Connecting the power cables . . . 73
Connection diagram . . . 73
Input cable connection procedure . . . 74
Removing the protective covering . . . 74
Motor cable connection procedure . . . 75
DC connection . . . 76
Checking the settings of the cooling fan transformer . . . 76
Removing the cover assembly . . . 77
Fastening the control cable clamp plate . . . 78

Grounding the control unit 78
Connecting the control unit to the drive module 79
Connecting the control cables 80
Default I/O connection diagram 81
Jumpers 82
External power supply for the JCU Control Unit (XPOW) 83
DI5 (XDI:5) as a thermistor input 83
Start interlock (XDI:A) 84
Drive-to-drive link (XD2D) 84
Safe torque off (XSTO) 85
Control cable connection procedure 85
Routing the control cables 86
Connecting a PC 87
Installing optional modules 87
Mechanical installation 87
Wiring the modules 87

8. Installation checklist

What this chapter contains 89
Mechanical installation 89
Cabinet construction 89
Instrumentation, busbars and cabling 90
Groundings and protection 91
Labels, switches, fuses and doors 91
Electrical installation 91
Cooling and driven equipment 92

9. Start-up

What this chapter contains 93
Start-up procedure 93

10. Fault tracing

What this chapter contains 95
LEDs 95
Warning and fault messages 95

11. Maintenance

What this chapter contains 97
Maintenance intervals 97
Cabinet 98
Heatsink 98
Fan 98
Replacing the cooling fan of the module 99
Replacing the drive module 100
Capacitors 102
Reforming the capacitors 102
Replacing the capacitor pack 103
Memory unit 104

12. Technical data

What this chapter contains . . . 105
Ratings . . . 105
Derating . . . 106
Ambient temperature derating . . . 106
Altitude derating . . . 106
Fuses (IEC) . . . 107
Calculation example . . . 107
Fuse tables . . . 109
gG fuses . . . 109
Ultrarapid (aR) fuses . . . 109
Quick guide for selecting between gG and aR fuses . . . 110
Fuses (UL) . . . 110
UL class T and L fuses . . . 111
Dimensions, weights and free space requirements . . . 111
Losses, cooling data and noise . . . 112
IP22 cabinet with no extra fan . . . 112
IP54 cabinet with an extra fan . . . 112
Terminal and lead-through data for the power cables . . . 113
Terminal data for the control cables . . . 113
Electrical power network specification . . . 113
Motor connection data . . . 113
Control unit (JCU-21) connection data . . . 114
Efficiency . . . 116
Degree of protection . . . 116
Ambient conditions . . . 116
Materials . . . 117
Applicable standards . . . 117
CE marking . . . 118
Compliance with the European Low Voltage Directive . . . 118
Compliance with the European EMC Directive . . . 118
Compliance with the European Machinery Directive . . . 118
“C-tick” marking . . . 118
Compliance with the EN 61800-3:2004 . . . 118
Definitions . . . 118
Category C3 . . . 119
Category C4 (+0E200) . . . 119
UL marking . . . 120
UL checklist . . . 120
CSA marking . . . 120
Patent protection in the USA . . . 120

13. Dimension drawings

What this chapter contains . . . 121
Frame without pedestal (mm) . . . 122
Frame with busbars on the left side (mm) . . . 123
Drive control unit (JCU) . . . 124
Package . . . 125
Dimension drawings (USA) . . . 126
Frame without pedestal (inches) . . . 126
Frame with busbars on the left side (inches) . . . 127

14. Example circuit diagrams

What this chapter contains 129
Example circuit diagram 130

15. du/dt filters and sine filters

What this chapter contains 131
du/dt filters 131
When is du/dt filter needed? 131
Selection table 131
Description, installation and technical data of the FOCH filters 131
Sine filters 132

Further information

Product and service inquiries 133
Product training 133
Providing feedback on ABB Drives manuals 133
Document library on the Internet 133

1

Safety instructions

What this chapter contains

This chapter contains the safety instructions which you must follow when installing, operating and servicing the drive. If ignored, physical injury or death may follow, or damage may occur to the drive, motor or driven equipment. Read the safety instructions before you work on the unit.

Use of warnings

Warnings caution you about conditions which can result in serious injury or death and/or damage to the equipment and advise on how to avoid the danger. The following warning symbols are used in this manual:

Electricity warning warns of hazards from electricity which can cause physical injury and/or damage to the equipment.

General warning warns about conditions, other than those caused by electricity which can result in physical injury and/or damage to the equipment.

Electrostatic sensitive devices warning warns of electrostatic discharge which can damage the equipment.

Hot surface warning warns of component surfaces that may become hot enough to cause burns if touched.

Safety in installation and maintenance

Electrical safety

These warnings are intended for all who work on the drive, motor cable or motor.

WARNING! Ignoring the following instructions can cause physical injury or death, or damage to the equipment:

- **Only qualified electricians are allowed to install and maintain the drive.**
- Never work on the drive, motor cable or motor when main power is applied. After disconnecting the input power, always wait for 5 min to let the intermediate circuit capacitors discharge before you start working on the drive, motor or motor cable.

  Always ensure by measuring with a multimeter (impedance at least 1 Mohm) that:

  1. voltage between drive input phases U1, V1 and W1 and the frame is close to 0 V.
  2. voltage between terminals UDC+ and UDC- and the frame is close to 0 V (units with additional DC busbars).
- Do not work on the control cables when power is applied to the drive or to the external control circuits. Externally supplied control circuits may cause dangerous voltages inside the drive even when the main power on the drive is switched off.
- Do not make any insulation or voltage withstand tests on the drive or drive modules.
- When reconnecting the motor cable, always check that the phase order is correct.

Note:

- The motor cable terminals on the drive are at a dangerously high voltage when the input power is on, regardless of whether the motor is running or not.
- The DC terminals (UDC+, UDC-) carry a dangerous DC voltage (over 500 V) when internally connected to the intermediate DC circuit.
- Depending on the external wiring, dangerous voltages (115 V, 220 V or 230 V) may be present on the terminals of relay outputs (XRO1 and XRO2) or Safe torque off (XSTO).
- The Safe torque off function does not remove the voltage from the main and auxiliary circuits.

Grounding

These instructions are intended for all who are responsible for the grounding of the drive.

WARNING! Ignoring the following instructions can cause physical injury, death, increased electromagnetic interference and equipment malfunction:

- Ground the drive, motor and adjoining equipment to ensure personnel safety in all circumstances, and to reduce electromagnetic emission and interference.
- Make sure that grounding conductors are adequately sized as required by safety regulations.
- In a multiple-drive installation, connect each drive separately to protective earth (PE).
- Where EMC emissions must be minimized, make a 360° high frequency grounding of cable entries at the cabinet lead-through in order to suppress electromagnetic disturbances. In addition, connect the cable shields to protective earth (PE) in order to meet safety regulations.

Note:

- Power cable shields are suitable for equipment grounding conductors only when adequately sized to meet safety regulations.
- As the normal leakage current of the drive is higher than 3.5 mA AC or 10 mA DC, a fixed protective earth connection is required by EN 50178, 5.2.11.1.

General safety

These instructions are intended for all who install and service the drive.

WARNING! Ignoring the following instructions can cause physical injury or death, or damage to the equipment:

- Handle the unit carefully.
- The drive module is heavy 200 kg (441 lb). Lift it by the upper part only using the lifting lugs attached to the top of the unit. The lower part will be deformed from lifting. Do not remove the pedestal before lifting.

  Do not tilt the drive. **The centre of gravity of the unit is high.** The unit will overturn from a tilt of about 6 degrees. **An overturning unit can cause physical injury.**

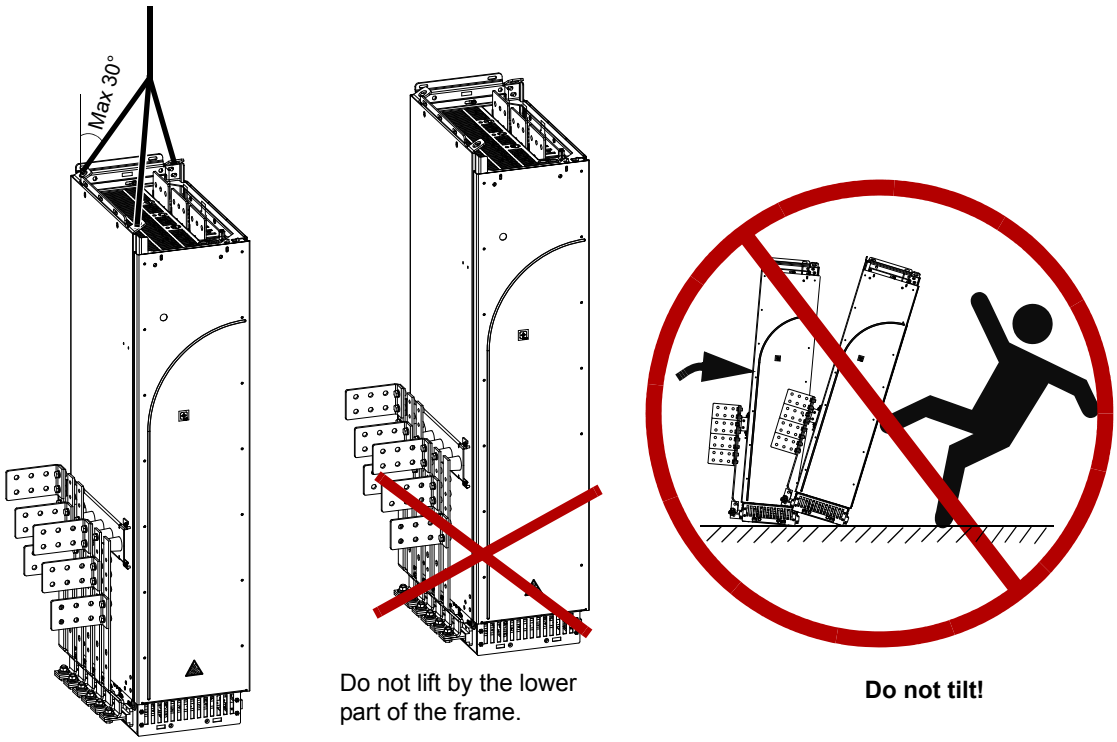

Do not lift by the lower part of the frame.

Do not tilt!

- Beware of hot surfaces. Some parts, such as heatsinks of power semiconductors, remain hot for a while after disconnection of the electrical supply.
- Make sure that dust from borings and grindings does not enter the drive when installing. Electrically conductive dust inside the unit may cause damage or malfunctioning.
- Ensure sufficient cooling.
- Do not fasten the drive by riveting or welding.

Fiber optic cables

WARNING! Ignoring the following instructions can cause equipment malfunction and damage to the fiber optic cables:

- Handle the fiber optic cables with care. When unplugging optic cables, always grab the connector, not the cable itself. Do not touch the ends of the fibers with bare hands as the fiber is extremely sensitive to dirt. The minimum allowed bend radius is 35 mm (1.4 in.).

Printed circuit boards

WARNING! Ignoring the following instructions can cause damage to the printed circuit boards:

- The printed circuit boards contain components sensitive to electrostatic discharge. Wear a grounding wrist band when handling the boards. Do not touch the boards unnecessarily.

Safe start-up and operation

General safety

These warnings are intended for all who plan the operation of the drive or operate the drive.

WARNING! Ignoring the following instructions can cause physical injury or death, or damage to the equipment:

- Before adjusting the drive and putting it into service, make sure that the motor and all driven equipment are suitable for operation throughout the speed range provided by the drive. The drive can be adjusted to operate the motor at speeds above and below the speed provided by connecting the motor directly to the power line.
- Do not activate any automatic fault reset functions of the drive control program if dangerous situations can occur. When activated, these functions will reset the drive and resume operation after a fault.
- Do not control the motor with an AC contactor or disconnecting device (disconnecting means); instead, use the control panel keys and , or commands via the I/O board of the drive. The maximum allowed number of charging cycles of the DC capacitors ie, power-ups by applying power, is five in ten minutes.

Note:

- If an external source for start command is selected and it is ON, the drive will start immediately after an input voltage break or fault reset unless the drive is configured for 3-wire (a pulse) start/stop.
- When the control location is not set to local, the stop key on the control panel will not stop the drive.

2

Introduction to the manual

What this chapter contains

This chapter describes the intended audience and contents of the manual. It contains a flowchart of steps in checking the delivery, installing and commissioning the drive. The flowchart refers to chapters/sections in this manual and to other manuals.

Target audience

This manual is intended for panel builders and system integrators who

- plan the cabinet assembly of the drive module and install the module into a user-defined cabinet
- plan the electrical installation of a drive cabinet
- make instructions for the end user of the drive concerning the mechanical installation of the drive cabinet, power and control cabling and maintenance.

Read the manual before working on the drive. You are expected to know the fundamentals of electricity, wiring, electrical components and electrical schematic symbols.

The manual is written for readers worldwide. Both SI and imperial units are shown.

Contents of the manual

This manual contains the instructions and information for the basic drive module configuration. The chapters of the manual are briefly described below.

Safety instructions give safety instructions for the installation, commissioning, operation and maintenance of the drive module.

Introduction to the manual introduces the manual.

Operation principle and hardware description describes the drive module.

Planning the cabinet installation guides in planning drive cabinets and installing the drive module into a user-defined cabinet. The chapter gives cabinet layout examples and free space requirements around the module for cooling.

Mechanical installation describes how to install the basic drive module into a cabinet.

Planning the electrical installation instructs in the motor and cable selection, protections and cable routing.

Electrical installation instructs in how to wire the drive.

Installation checklist contains lists for checking the mechanical and electrical installation of the drive.

Start-up describes the start-up procedure of the drive.

Fault tracing describes the fault tracing of the drive.

Maintenance contains preventive maintenance instructions.

Technical data contains the technical specifications of the drive module eg, the ratings, sizes and technical requirements, provisions for fulfilling the requirements for CE and other markings.

Dimension drawings contains dimension drawings of the drive modules and auxiliary components.

Example circuit diagrams shows an example circuit diagram for a cabinet-installed drive module.

du/dt filters and sine filters describes how to select du/dt filters for the drive.

Related manuals

See *List of related manuals* on the inside of the front cover.

Categorization by option code

The instructions and technical data which concern only certain optional selections are marked with option codes eg, +0C168. The options included in the drive can be identified from the option codes visible on the type designation label. The option selections are listed in section *Type designation key* on page *29*.

Quick installation, commissioning and operating flowchart

Task	See
Plan the electrical installation. Check the ambient conditions, ratings, required cooling air flow, input power connection, compatibility of the motor, motor connection, and other technical data. Select the cables.	*Planning the cabinet installation* (page *31*) *Planning the electrical installation* (page *51*) *Technical data* (page *105*) Option manual (if optional equipment is included)

Task	See
Unpack and check the units. Check that all necessary optional modules and equipment are present and correct. Only intact units may be started up.	*Mechanical installation* (page *43*) If the drive module has been non-operational for more than one year, the converter DC link capacitors need to be reformed. Ask ABB for instructions.
Check the installation site.	*Ambient conditions* (page *116*)
Fasten the base of the cabinet to floor. Install the drive module into the cabinet.	*Mechanical installation* (page *43*)
Route the cables.	*Routing the cables* (page *60*)
Check the insulation of the supply cable, the motor and the motor cable.	*Checking the insulation of the assembly* (page *71*)
Connect the power cables. Connect the control and the auxiliary control cables.	*Connecting the power cables* (page *73*), *Connecting the control unit to the drive module* (page *79*), *Connecting the control cables* (page *80*) Manuals for any optional equipment
Check the installation.	*Installation checklist* (page *89*)
Commission the drive.	*Start-up* (page *93*)
Operating of the drive: start, stop, speed control etc.	*ACQ810-04 quick start-up guide*, *ACQ810 pump control program firmware manual*

Terms and abbreviations

Term/Abbreviation	Explanation
EMC	Electromagnetic Compatibility
EMI	Electromagnetic Interference
FIO-11	Optional analogue I/O extension
FIO-21	Optional analog and digital I/O extension
FIO-31	Optional digital I/O extension with four relays
FDNA-0x	Optional DeviceNet™ adapter
FENA-0x	Optional Ethernet/IP™ adapter
FLON-0x	Optional LonWorks® adapter
FSCA-0x	Optional Modbus adapter
FPBA-0x	Optional PROFIBUS DP adapter
Frame (size)	Size of the drive module. The drive modules described in this manual are of frame size G.
IGBT	Insulated Gate Bipolar Transistor; a voltage-controlled semiconductor type widely used in inverters due to their easy controllability and high switching frequency.
I/O	Input/Output
JCU	The control unit of the drive module. The external I/O control signals are connected to the JCU, or optional I/O extensions mounted on it.
JINT	Main circuit board
JMU-xx	The memory unit attached to the control unit of the drive
RFI	Radio-frequency interference

3

Operation principle and hardware description

What this chapter contains

This chapter describes the operating principle and construction of the drive module in short.

Product overview

The ACQ850-04 is a drive module for controlling asynchronous AC induction motors for water and waste water applications. The degree of protection of the drive module is IP00. The module must be installed into a cabinet by the customer.

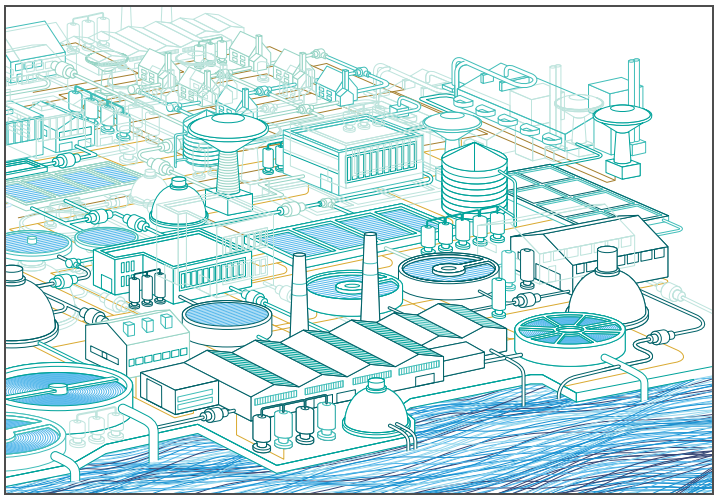

The main circuit of the drive module is shown below.

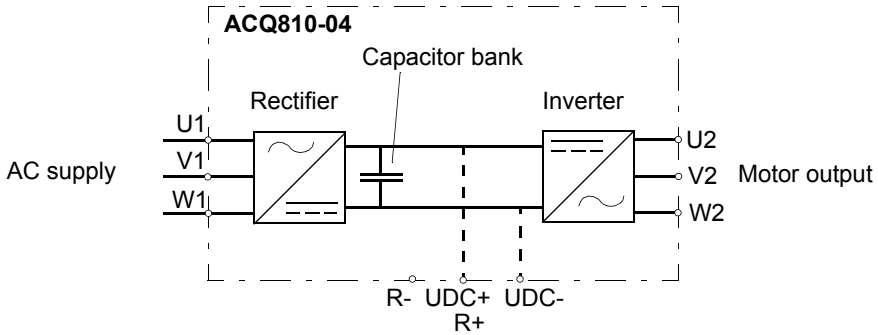

This table describes the operation of the main circuit in short.

Component	Description
Rectifier	Converts the three-phase AC voltage to DC voltage.
Capacitor bank	Energy storage which stabilizes the intermediate circuit DC voltage.
Inverter	Converts the DC voltage to AC voltage and vice versa. The motor operation is controlled by switching the IGBTs.

Layout

The components of the standard unit are shown below.

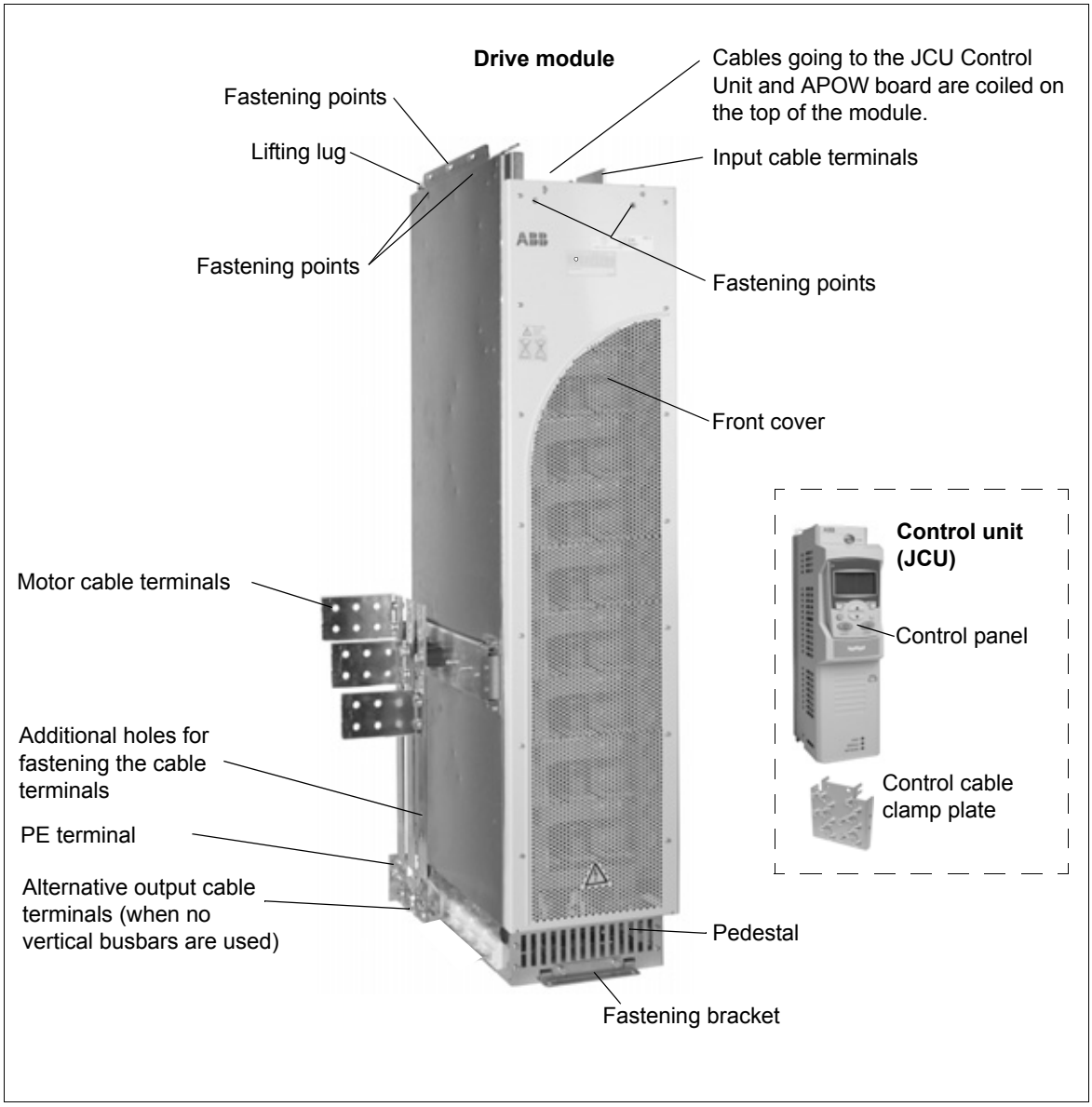

The control unit layout is shown below (cover assembly and protective coverings of the slots removed).

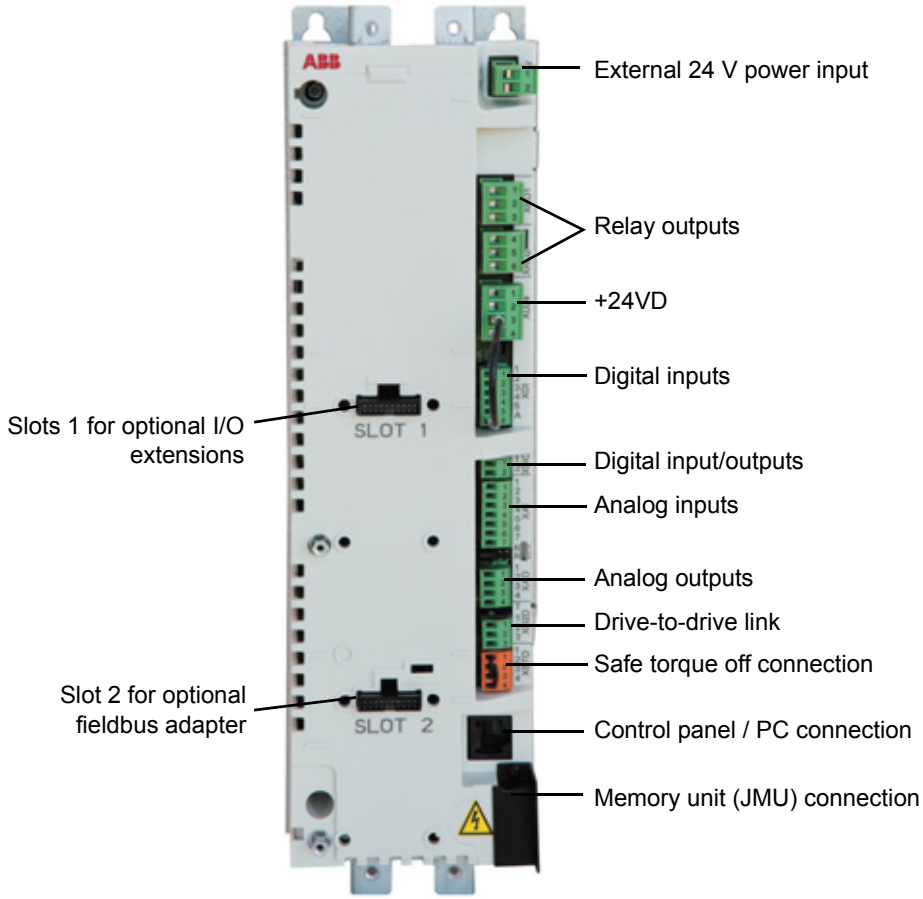

Alternative output busbar configurations

The motor busbars can be fastened on the left-hand long side of the module and DC busbars on the right-hand side. Alternatively, the motor can be fastened on the right-hand long side of the module and DC busbars on the left-hand side. The output busbars can also be fastened on the short back side of the module. For more information, contact your local ABB representative.

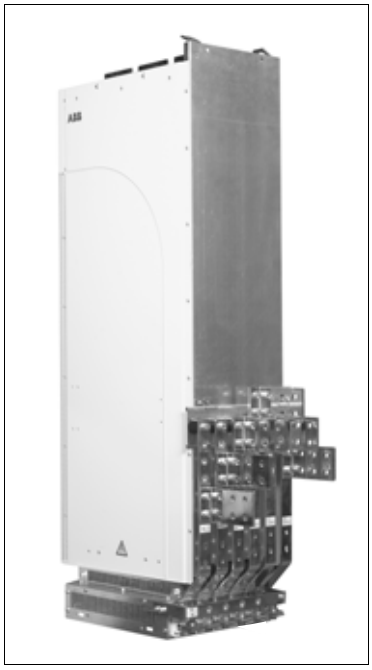

Output busbars on the short side of the module

Control unit variants

Control unit with control panel (standard)

a)

Control unit without control panel and panel holder (+0J400)

a) When covers are removed

Control unit without front cover (+0C168)

Component placement

The component layout stickers of the drive module are shown below. The stickers show all possible components. Not all of them are present in each delivery or described here. Components that need to be changed regularly are listed below:

Designation	Component
Y41	Cooling fan
C201-C214	Capacitors

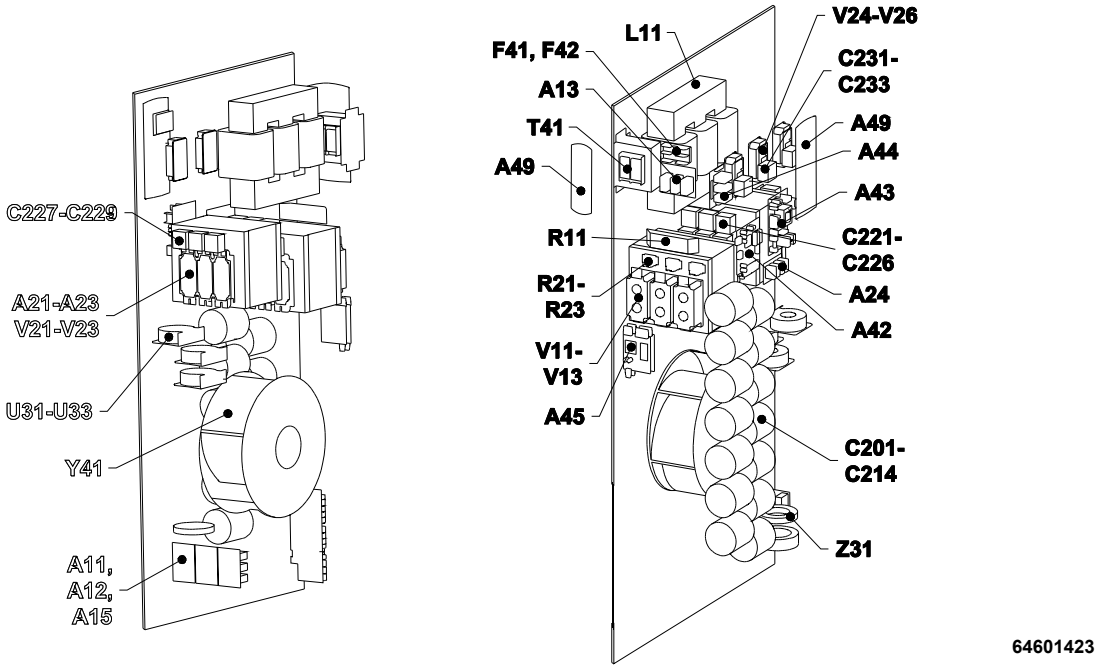

Power connections and control interfaces

The diagram shows the power connections and control interfaces of the drive.

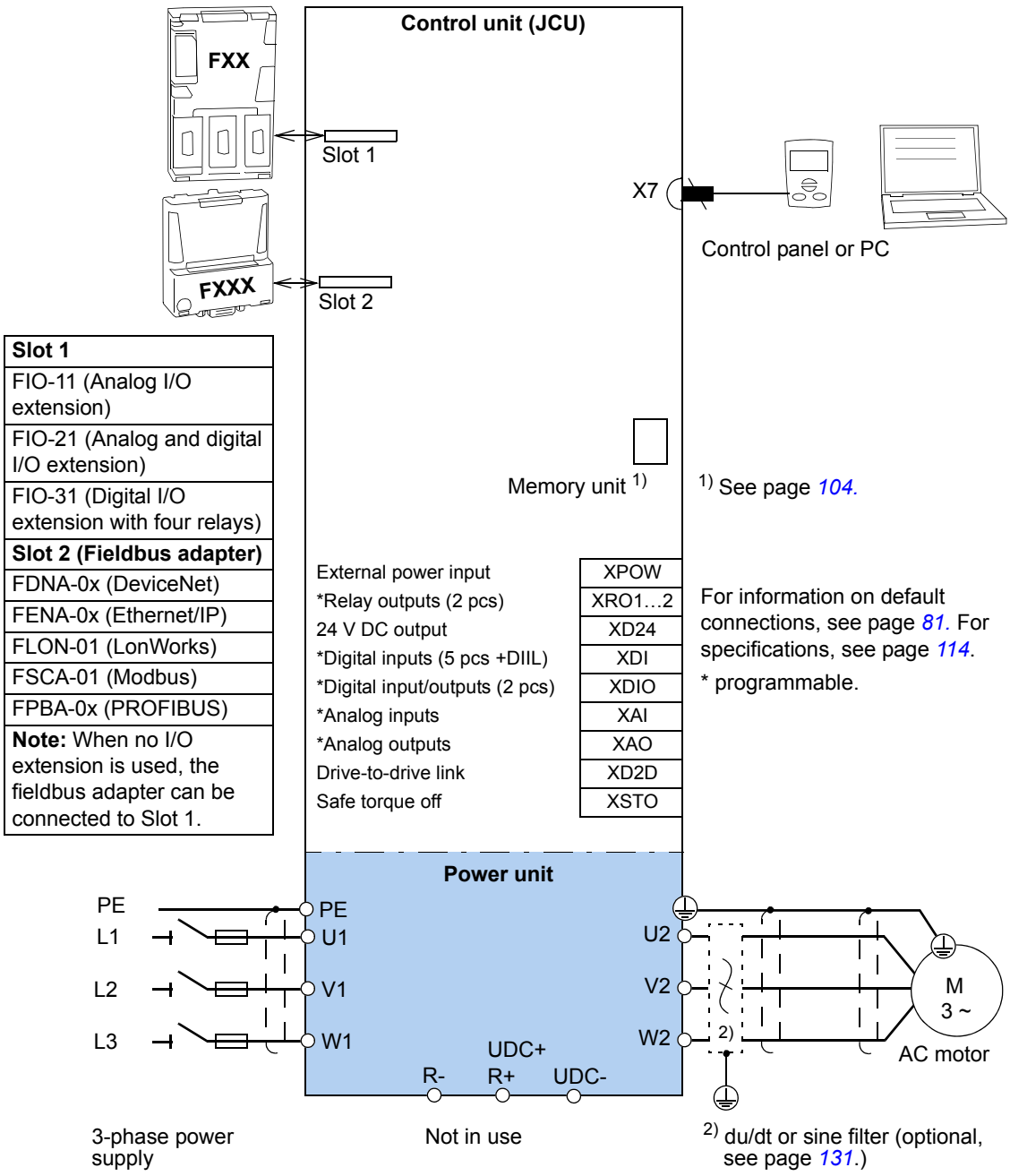

Slot 1
FIO-11 (Analog I/O extension)
FIO-21 (Analog and digital I/O extension)
FIO-31 (Digital I/O extension with four relays)
Slot 2 (Fieldbus adapter)
FDNA-0x (DeviceNet)
FENA-0x (Ethernet/IP)
FLON-01 (LonWorks)
FSCA-01 (Modbus)
FPBA-0x (PROFIBUS)
Note: When no I/O extension is used, the fieldbus adapter can be connected to Slot 1.

Cables for connecting the control unit to the drive module and control panel

The cables connecting the drive module and control panel to the control unit are shown below. See section *Connecting the control unit to the drive module*, page *79* for the actual connections.

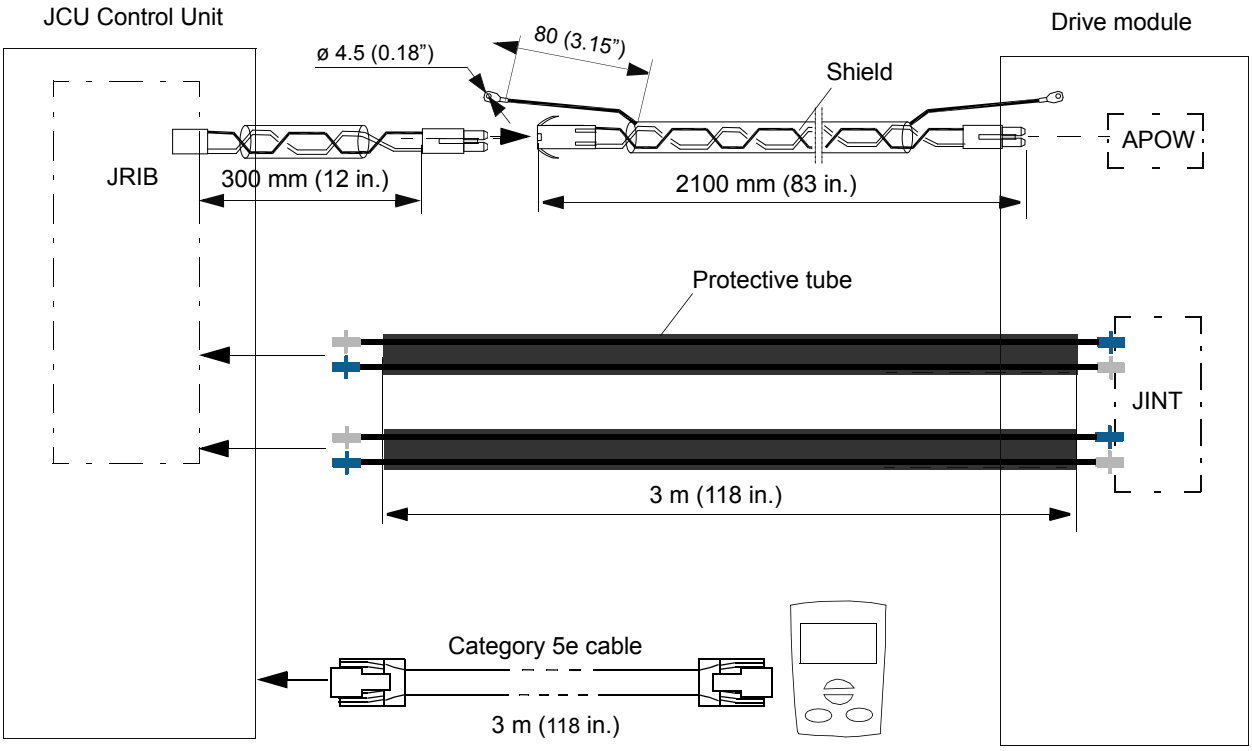

Circuit boards

The drive contains the following printed circuit boards as standard:

- main circuit board (JINT)
- control and I/O board (JCON) inside the JCU Control Unit
- adapter board (JRIB) connected to the JCON board
- input bridge control board (AINP)
- input bridge protection board (AIBP) which includes snubbers for the thyristors and varistors
- power supply board (APOW)
- gate driver control board (AGDR)
- diagnostics and panel interface board (JDPI)

Type designation label

The type designation label includes an IEC and NEMA rating, CE, “C-tick”, C-UL US, and CSA markings, a type designation and a serial number, which allow individual recognition of each unit. The first digit of the serial number refers to the manufacturing plant. The next four digits refer to the unit’s manufacturing year and week respectively. The remaining digits complete the serial number so that there are no two units with the same serial

number. The type designation label is located on the front cover. An example label is shown below.

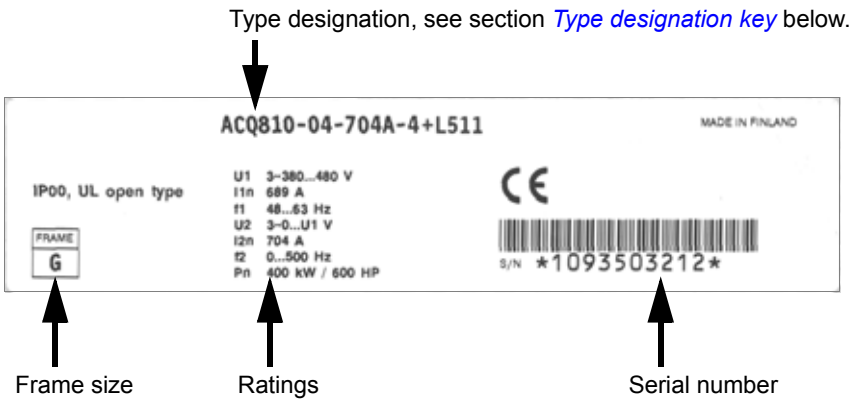

Type designation key

The type designation contains information on the specifications and configuration of the drive module. The first digits from left express the basic configuration eg, ACQ810-04-477A-4. The optional selections are given thereafter, separated by plus signs eg, +L519. The main selections are described below. Not all selections are available for all types. For more information, refer to *ACQ810-04 Ordering Information* (00588241), available on request.

Selection	**Alternatives**	
Product series	ACS850 product series	
Type	04	Drive module. When no options are selected: IP00 (UL open type), top entry, side exit, JCU drive control unit with front cover, control panel holder and control panel, EMC filter for Category C3, common mode filter, Standard pump control program, Safe torque off function, coated boards, pedestal with output on the long side, output busbar set for motor, base and wall mounting brackets, *Quick start-up guide* (multilingual) and CD containing all manuals.
Size	Refer to the rating tables, page *105*	
Voltage range (nominal rating in bold)	4	380…480 V AC
+ options		
Filter	0E200	No EMC filter
Control panel and control unit	0J400	No control panel and panel holder
	J410	Control panel with door mounting kit. Includes control panel mounting platform, IP54 cover and a 3-meter panel connection cable.
	0C168	No control panel, panel holder and front cover for the JCU Control Unit
Fieldbus	K...	+K451: FDNA-01 DeviceNet adapter +K452: FLON-01 LonWorks adapter +K454: FPBA-01 PROFIBUS DP adapter +K458: FSCA-01 Modbus adapter +K466: FENA-01 Ethernet/IP and Modbus/TCP adapter
I/O extensions and feedback interfaces	L...	+L500: FIO-11 analogue I/O extension +L519: FIO-21 analogue and digital I/O extension +L511: FIO-31 digital I/O extension with four relays

4

Planning the cabinet installation

What this chapter contains

This chapter guides in planning drive cabinets and installing the drive module into a user-defined cabinet so that the front of the module faces the cabinet door. The chapter gives cabinet layout examples and free space requirements around the module for cooling. The issues discussed are essential for the safe and trouble-free use of the drive system.

Note: The installation must always be designed and made according to applicable local laws and regulations. ABB does not assume any liability whatsoever for any installation which breaches the local laws and/or other regulations.

Basic requirements for the cabinet

Use a cabinet which:

- has a frame sturdy enough to carry the weight of the drive components, control circuitry and other equipment installed in it. If the cabinet is allowed to be placed on a cable channel, ensure that the cabinet structure carries the weight also in this way of installation.
- protects the user and drive module against contact and meets the requirements for dust and humidity.

Planning the layout of the cabinet

Design a spacious layout to ensure easy installation and maintenance. Sufficient cooling air flow, obligatory clearances, cables and cable support structures all require space.

Place the control board(s) away from:

- the main circuit components such as contactor, switches and power cables
- hot parts (heat sink, air outlet of the drive module).

Layout examples, door closed

Layout examples for IP22 and IP54 cabinets are shown below.

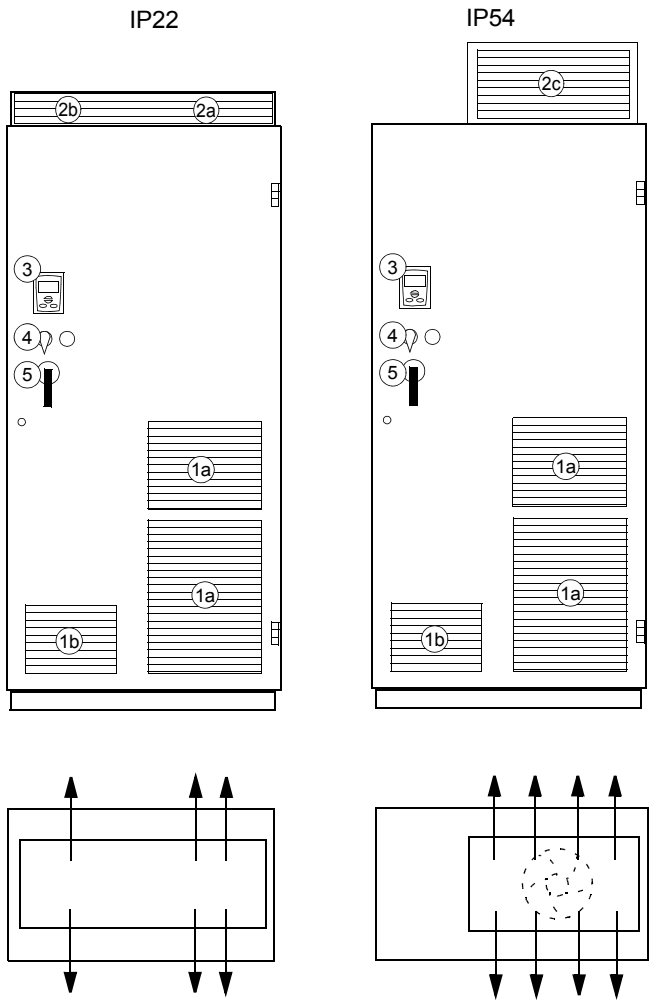

1a Air inlet for the drive module
1b Air inlet for the other equipment
2a Air outlet for the drive module
2b Air outlet for the other equipment
2c Air outlet for the drive module and the other equipment, an extra exhaust fan
3 Drive control panel (control panel door mounting kit, +J410). The control panel is connected to the JCU Control Unit inside the cabinet)
4 Contactor control switch and emergency stop switch (connected to the contactor control circuit inside the cabinet)
5 Operating handle of the disconnector

Layout examples, door open

Layout examples for IP22 and IP54 cabinets are shown below

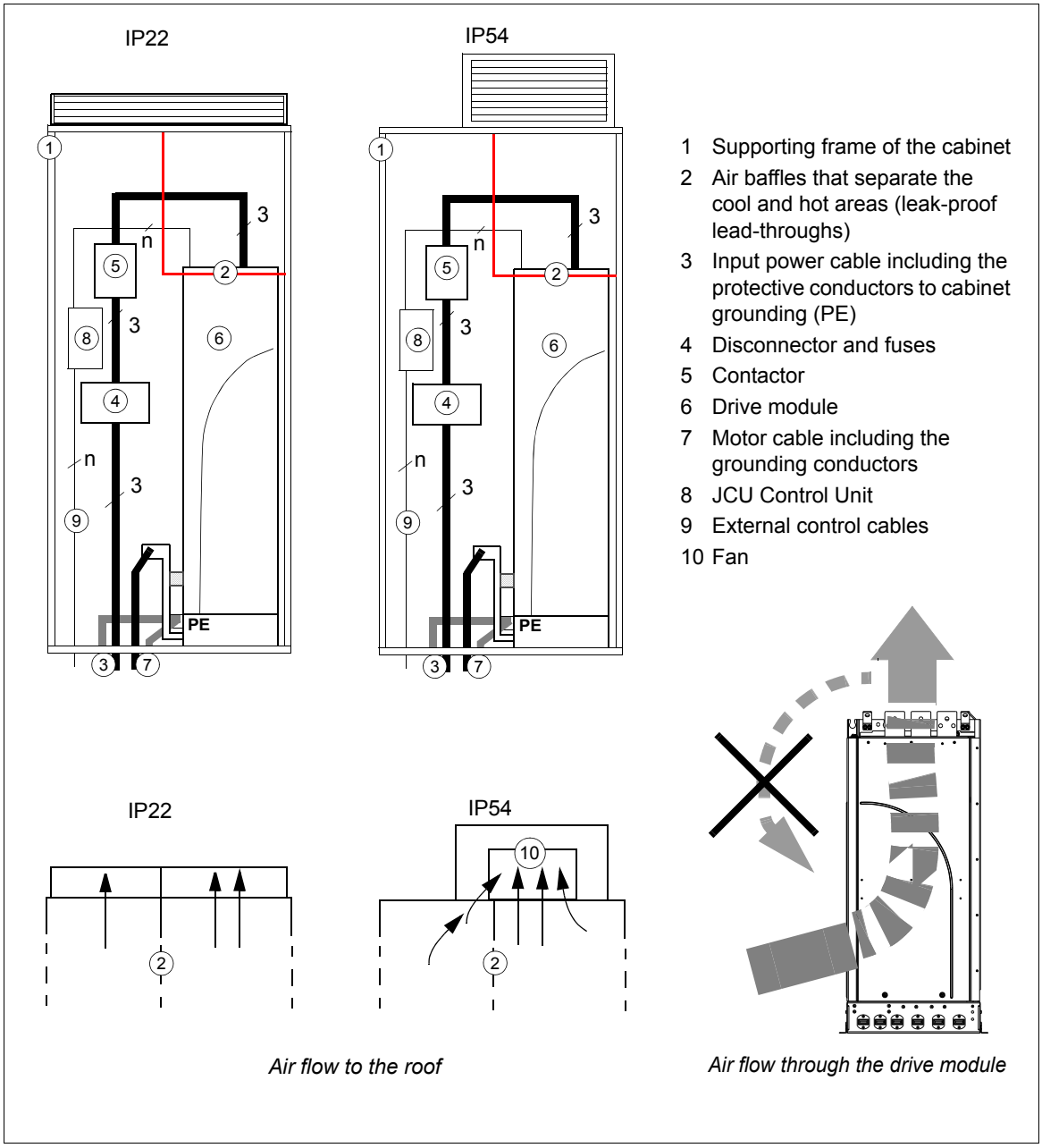

Air flow to the roof

Air flow through the drive module

Note: See also section *Required free space around the drive module*, page *39*.

WARNING! Never use the module without the pedestal.

Arranging the grounding inside the cabinet

Arrange proper grounding for any cross-members or shelves on which components are mounted:

- Leaving the component connecting surfaces unpainted will form a proper grounding contact to the cabinet frame.
- The drive module will be grounded to the cabinet frame via its fastening screws.

Selecting busbar material and preparation of the joints

If planning the use of busbars, note the following:

- Tin-plated copper is recommended. Aluminium can also be used.
- For the joints of aluminium busbars, the oxide layer must be removed and suitable anti-oxidant joint compound applied.

Tightening torques

Apply the following torques to grade 8.8 screws (with or without joint compound) that tighten electric contacts.

Screw size	Torque
M5	3.5 N·m (2.6 lbf·ft)
M6	9 N·m (6.6 lbf·ft)
M8	20 N·m (14.8 lbf·ft)
M10	40 N·m (29.5 lbf·ft)
M12	70 N·m (52 lbf·ft)
M16	180 N·m (133 lbf·ft)

Planning the fastening of the cabinet

Note the following when planning the fastening of the cabinet:

- The cabinet must be fastened to the floor from front and back.
- If fastening at the back is not possible or the cabinet will be exposed to vibration, the cabinet must be fastened at the top to the rear wall/roof.

WARNING! Do not fasten the cabinet by electric welding if the drive module is already installed inside the cabinet. ABB does not assume any liability for damages caused by electric welding as the welding circuit may damage electronic circuits in the cabinet.

Planning the cabinet placement on a cable channel

Note the following when planning to place the cabinet on a cable channel:

- The cabinet structure must be sturdy enough. If the whole cabinet base will not be supported from below, the cabinet weight must lie on the sections that the floor carries.
- The cabinet must have a sealed bottom plate and cable lead-throughs to ensure the degree of protection, fire protection and EMC requirements.

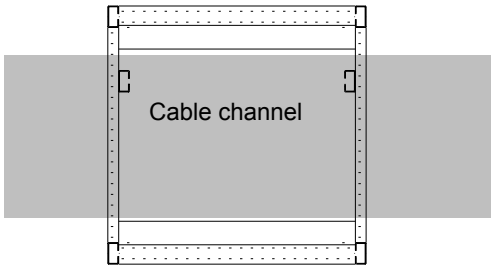

The carrying structure on a cable channel

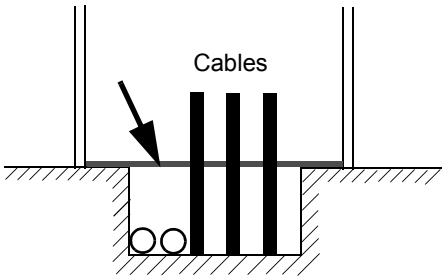

Cabinet side view with a bottom plate

Planning the Electro Magnetic Compatibility (EMC) of the cabinet

Note following when planning the electromagnetic compatibility of the cabinet:

- Generally, the fewer and smaller the holes in the cabinet, the better the interference attenuation. The maximum recommended diameter of a hole in galvanic metal contact in the covering cabinet structure is 100 mm. Pay special attention to the cooling air inlet and outlet gratings.
- The best galvanic connection between the steel panels is achieved by welding them together as no holes are necessary. If welding is not possible, the seams between the panels **are recommended to be left unpainted** and equipped with special conductive EMC strips to provide adequate galvanic connection. Usually, reliable strips are made of flexible silicon mass covered with a metal mesh. The non-tightened touch-contact of the metal surfaces is not sufficient, so a conductive gasket between the surfaces is required. The maximum recommended distance between assembly screws is 100 mm.
- Sufficient high-frequency grounding network must be constructed in the cabinet to avoid voltage differences and forming of high-impedance radiator structures. A good high-frequency grounding is made with short flat copper braids for low inductance. One-point high-frequency grounding cannot be used due to the long distances inside the cabinet.
- 360° high frequency grounding of the cable shields at the cable lead-throughs improves the EMC shielding of the cabinet.

- 360° high frequency grounding of the motor cable shields at their entries is recommended. The grounding can be implemented by a knitted wire mesh screening as shown below.

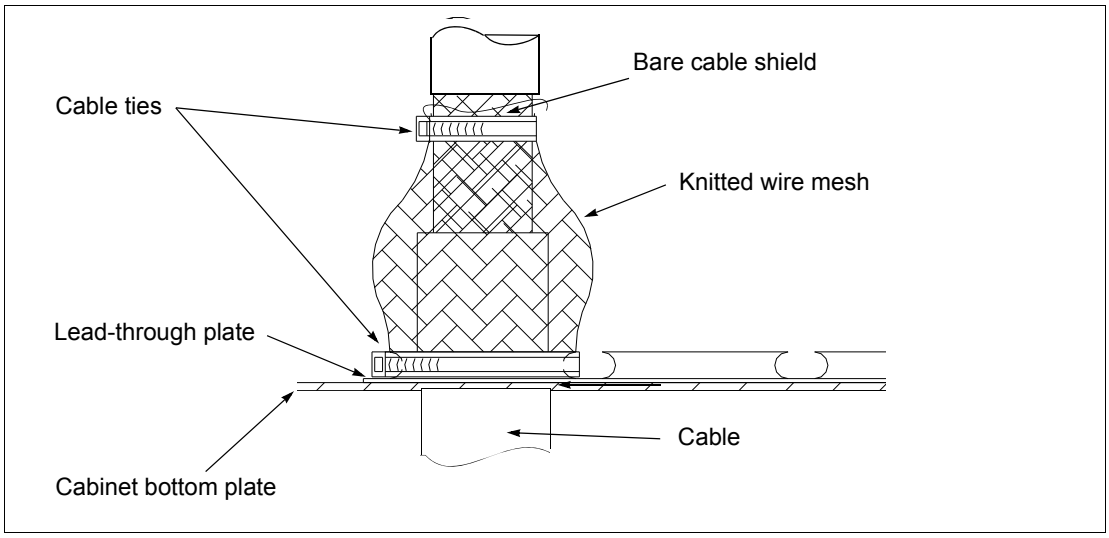

- 360° high frequency grounding of the control cable shields is recommended at their entries. The shields can be grounded by means of conductive shielding cushions pressed against the cable shield from both directions:

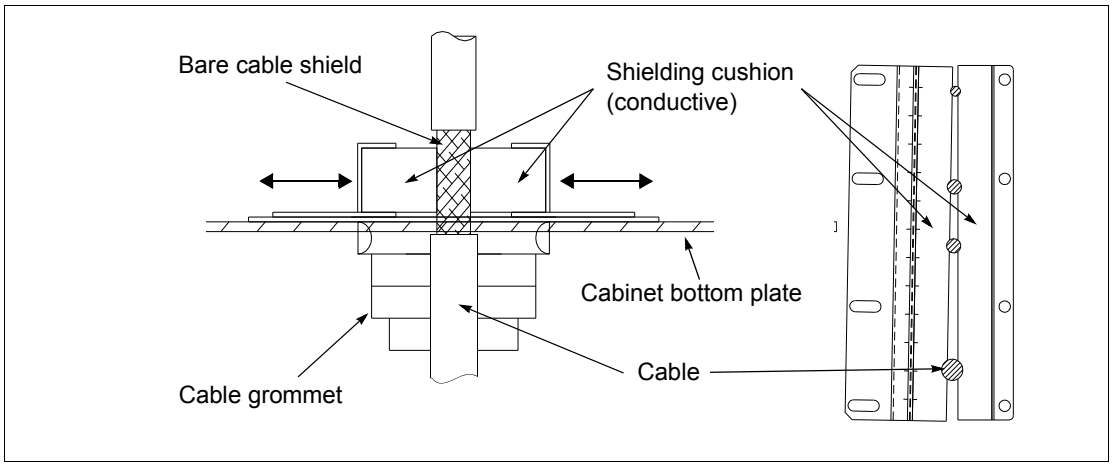

Planning the grounding of the cable shields at the cabinet lead-through

Follow the principle shown in the figure below when planning the grounding of the cable shields at the cabinet lead-through.

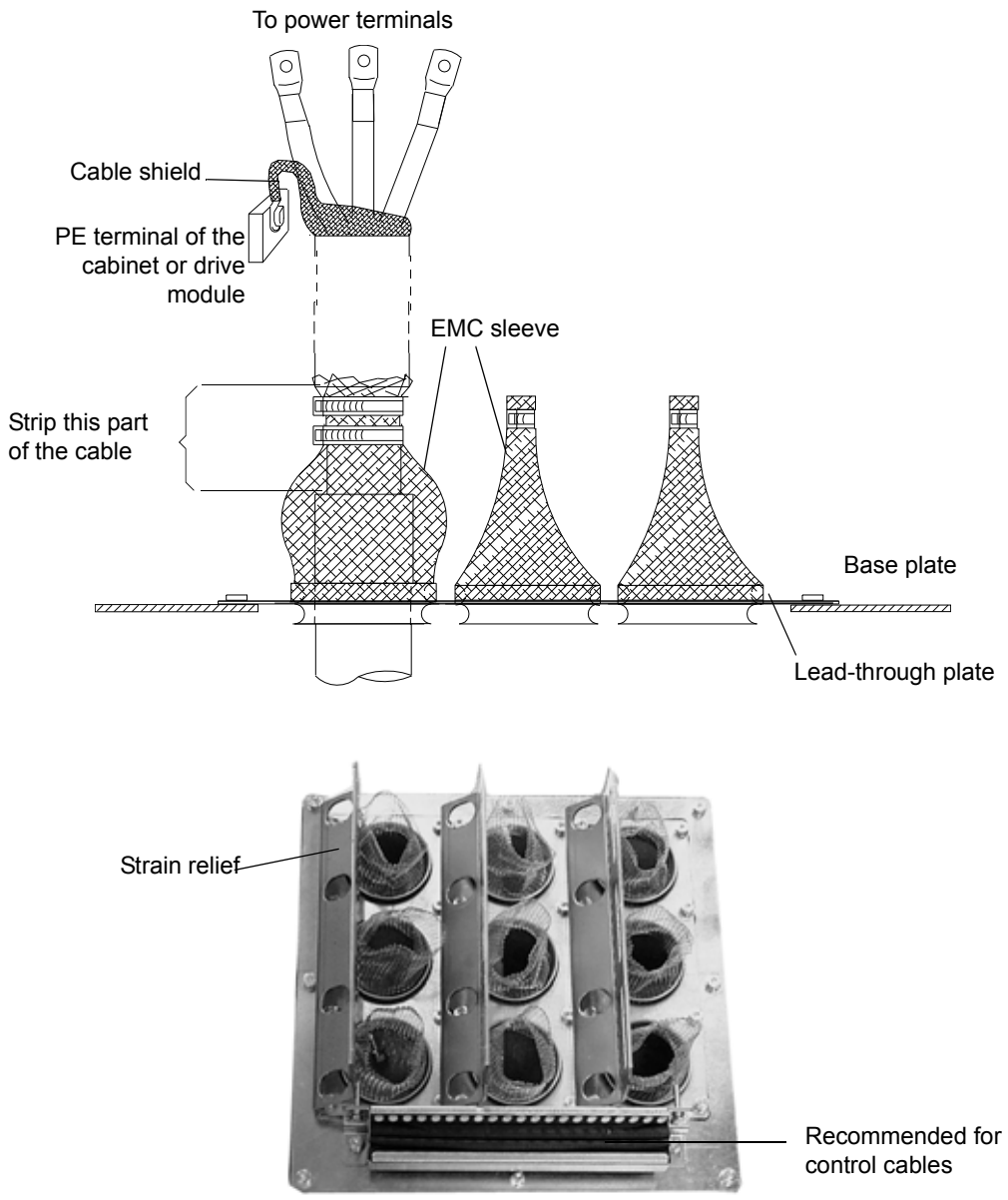

Example cable lead-through

Planning the cooling

Note following guidelines when planning the cooling of the cabinet:

- The installation site must be sufficiently ventilated so that the cooling air flow and ambient temperature requirements of the drive module are met, see pages *112* and *116*. The internal cooling fan of the drive module rotates at a constant speed thus blowing constant air flow through the module. Whether the same amount of air must be replaced all the time in the facility depends on how much heat must be removed.

- The cabinet must have enough free space for the components to ensure sufficient cooling. Observe the minimum clearances given for each component. For the required free space around the drive module, see page *39*.
- The heat dissipated by cables and other additional equipment must also be ventilated.
- The air inlets and outlets must be equipped with gratings that:
  - guide the air flow
  - protect against contact
  - prevent water splashes from entering the cabinet.
- The drawing below shows two typical cabinet cooling solutions. The air inlet is at the bottom of the cabinet, while the outlet is at the top, either on the upper part of the door or on the roof.

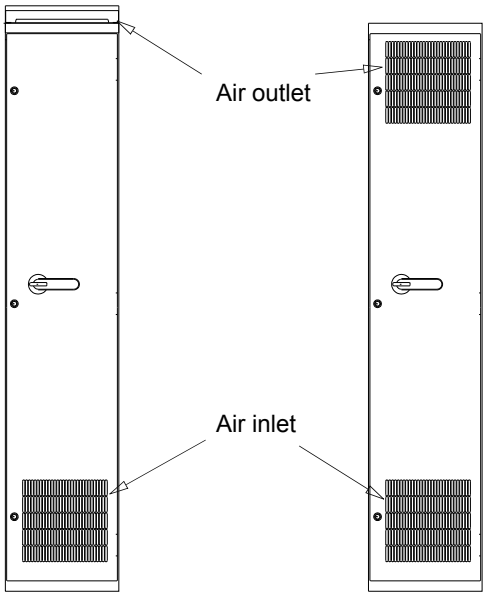

- The internal cooling fans of the drive modules and reactors/chokes are usually sufficient to keep the component temperatures low enough in IP22 cabinets.
- In IP54 cabinets, thick filter mats are used to prevent water splashes from entering the cabinet. This entails the installation of additional cooling equipment, such as an exhaust fan.
- See page *112* for:
  - allowed temperature rise inside the cabinet
  - allowed pressure drop over the cabinet that the module fan can overcome
  - air inlet and outlet sizes required for the module cooling and recommended filter material (if used).

Preventing the recirculation of hot air

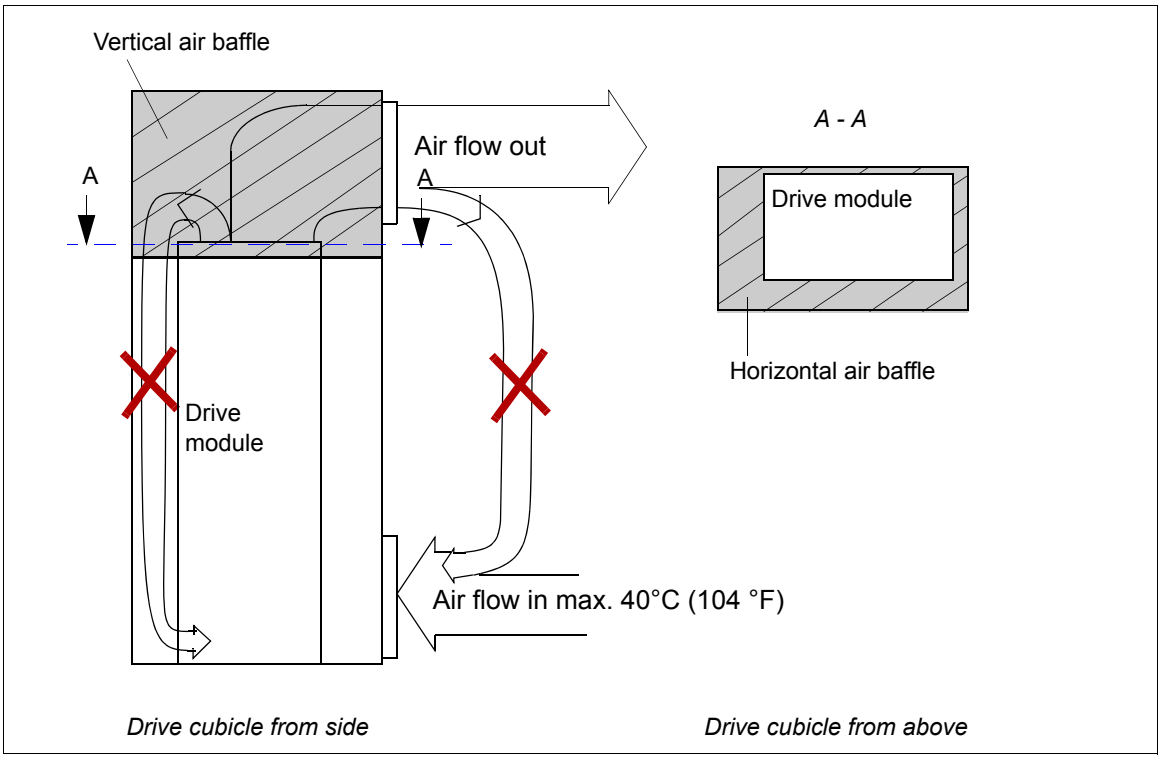

Prevention the air recirculation outside the cabinet

Prevent hot air circulation outside the cabinet by leading the outcoming hot air away from the area where the inlet air to the cabinet is taken. Possible solutions are listed below:

- gratings that guide air flow at the air inlet and outlet
- air inlet and outlet at different sides of the cabinet
- cool air inlet in the lower part of the front door, and an extra exhaust fan on the roof of the cabinet.

Prevention the air recirculation inside the cabinet

Prevent hot air circulation inside the cabinet with eg, leak-proof air baffles at the positions shown in the diagrams in section *Required free space around the drive module* below. No gaskets are usually required.

Required free space around the drive module

Free space around the drive module is needed for ensuring that sufficient cooling air flows through the module and that the module cools properly.

Free space at top with high air inlet gratings in the cabinet door

The required free space at the top of the module is shown below when the air inlet gratings in the cabinet door are as high as the grating of the module. See also page 41.

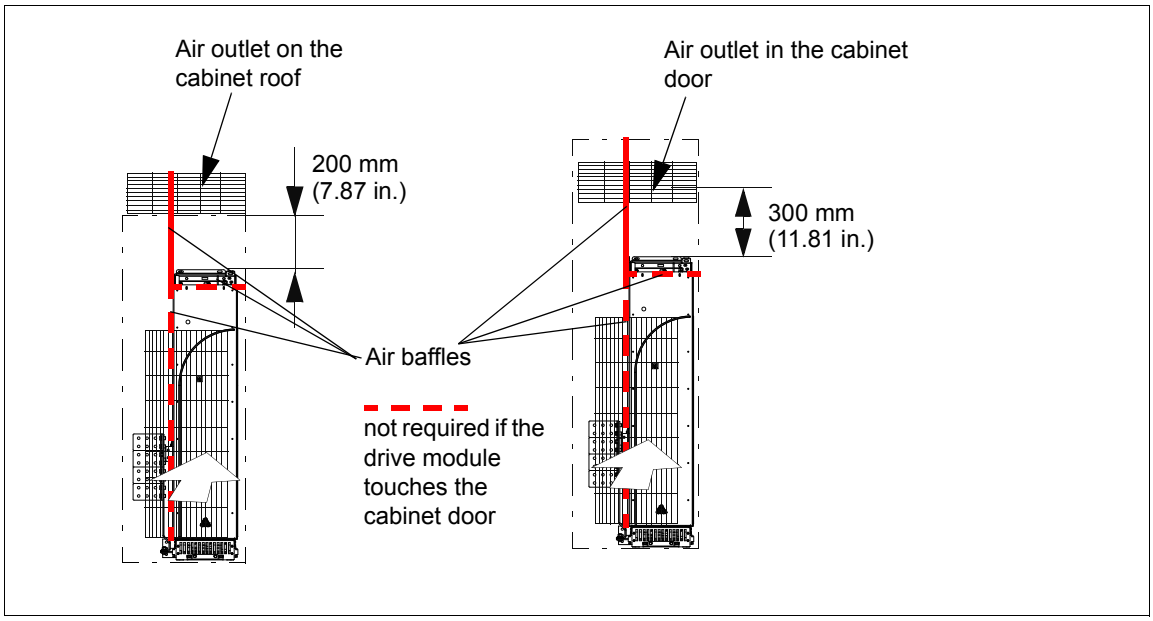

Free space at top with low air inlet gratings in the cabinet door

The required free space at the top of the module is shown below when the air inlet gratings are located only in the lower part of the cabinet door. **Note:** Air inlet gratings only at the lower part of the cabinet door are not recommended without an extra fan. The air baffles are examples. See also page 41.

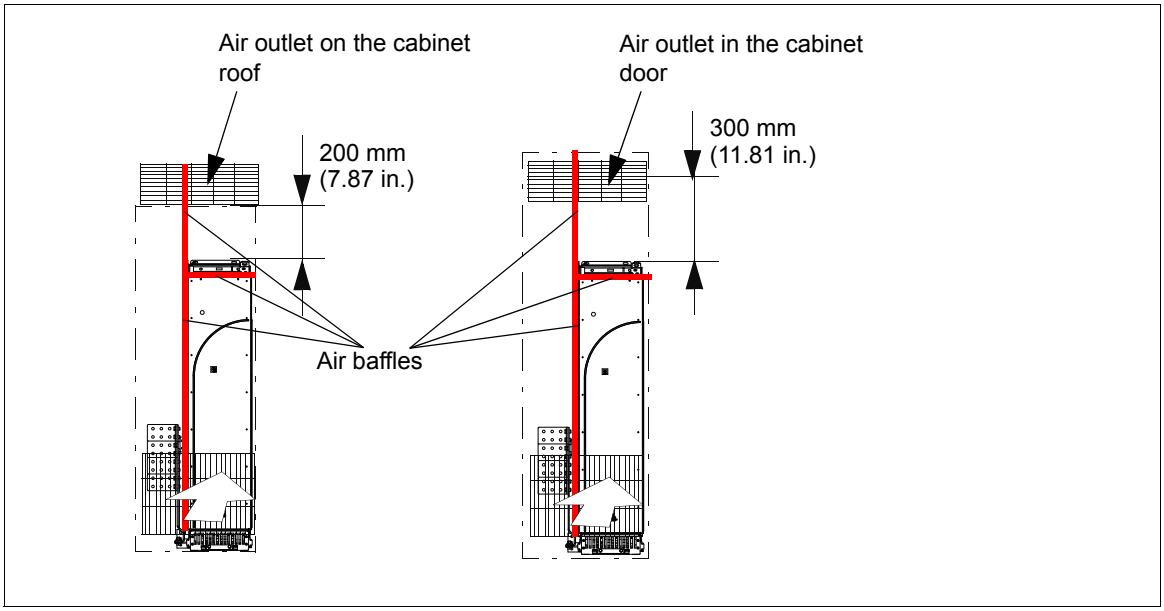

Free space at the side and front of the drive module

The figure below shows the required free space in a unit with motor busbars connected to the left-hand side of the module. The required free space when no vertical busbars are used is also shown.

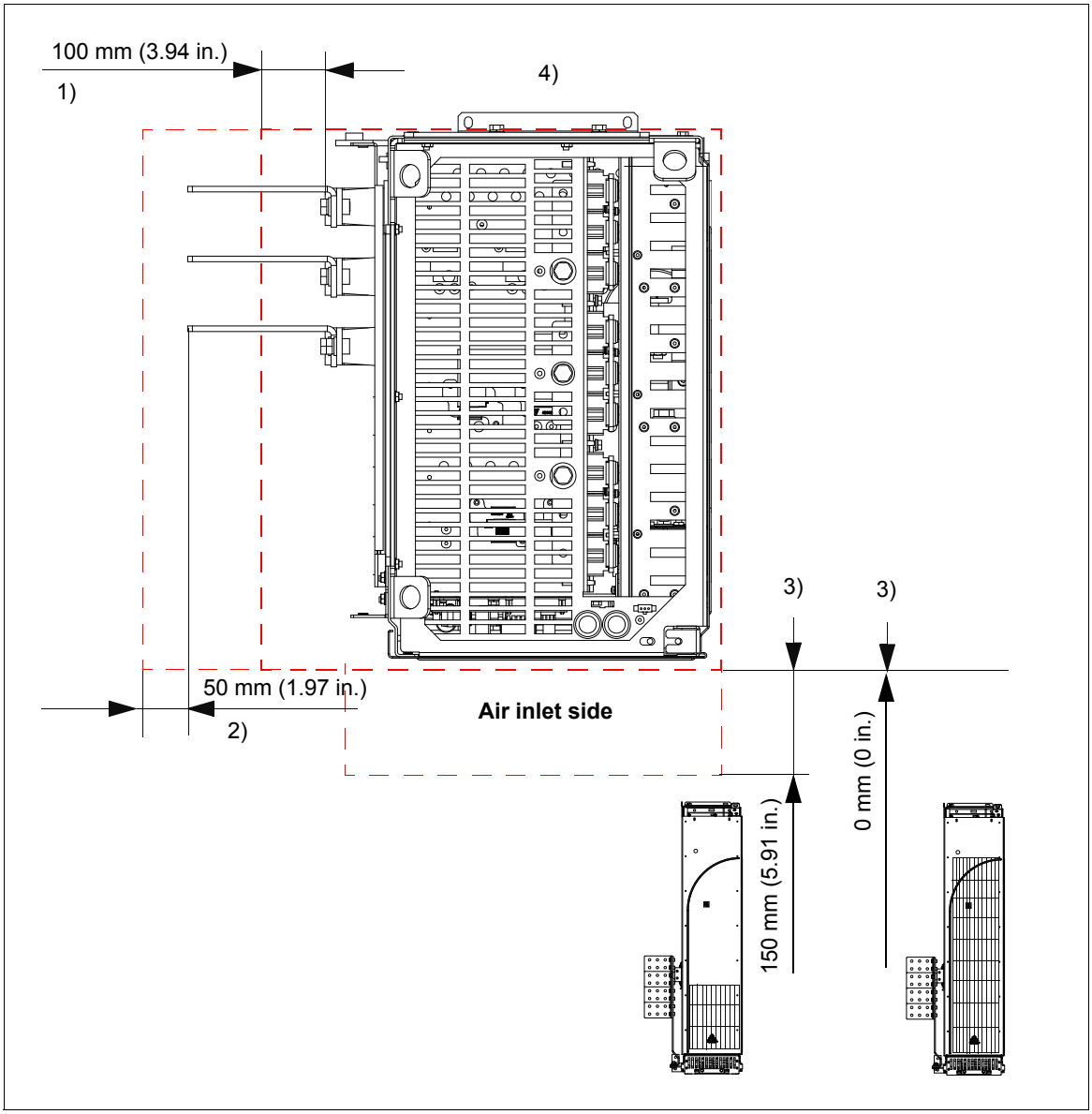

1) When cables are connected to the output busbars of the pedestal 100 mm (3.94 in.) free space around the busbars is required for cooling.
2) When cables connected to the vertical output busbar terminals 50 mm (1.97 in.) free space around the busbar terminals is required for cooling.
3) The required free space in front of the unit depends on the gratings in the cabinet door:
   - 0 mm (0 in.) with air inlets as high as the grating in the module 1120 mm (44 in.)
   - 150 mm (5.91 in.) with air inlets at the lower part of the cabinet only.
4) No extra space is needed at the back.

Other installation positions

Contact your local ABB representative.

Planning the placement of the control panel

Note the following alternatives when planning the placement of the control panel:

- The control panel can be snapped on the control unit. See page 23.
- The control panel can be mounted onto the cabinet door using the control panel mounting kit (+J410). For the installation instructions, refer to *ACS-CP-U control panel IP54 mounting platform kit (+J410) installation guide* (3AUA0000049072 [English]).

Planning the use of cubicle heaters

Use a cubicle heater if there is a risk of condensation in the cabinet. Although the primary function of the heater is to keep the air dry, it may also be required for heating at low temperatures.

5

Mechanical installation

What this chapter contains

This chapter describes how to install the drive module into a cabinet.

Safety

WARNING! The drive module is heavy 200 kg (441 lb). Lift it by the upper part only using the lifting lugs attached to the top of the unit. The lower part will be deformed from lifting. Do not remove the pedestal before lifting. Do not tilt the drive. **The centre of gravity of the unit is high.** The unit will overturn from a tilt of about 6 degrees. **An overturning unit can cause physical injury.**

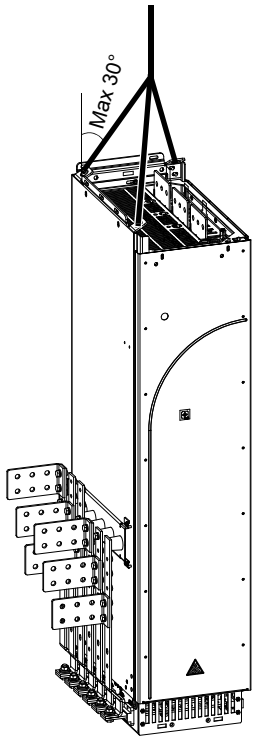

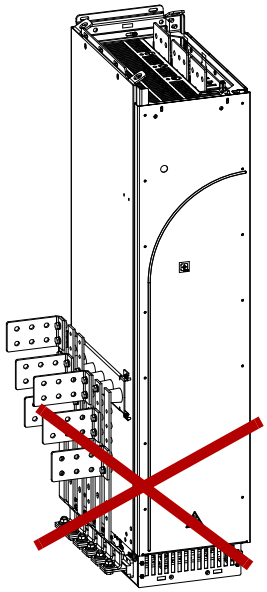

Do not lift by the lower part of the frame.

Do not tilt!

Checking the installation site

The material below the drive must be non-flammable and strong enough to carry the weight of the drive.

See chapter *Technical data* for the allowed operating conditions.

Required tools

- Set of screw drivers
- Torque wrench with a 500 mm (20 in.) or 2 × 250 mm (2 × 10 in.) long extension bar
- 19 mm (3/4 in.) socket, 17 mm (11/16 in.) magnetic-end socket

Moving and unpacking the unit

Move the transport package by pallet truck to the installation site.

The layout of the transport package is shown below.

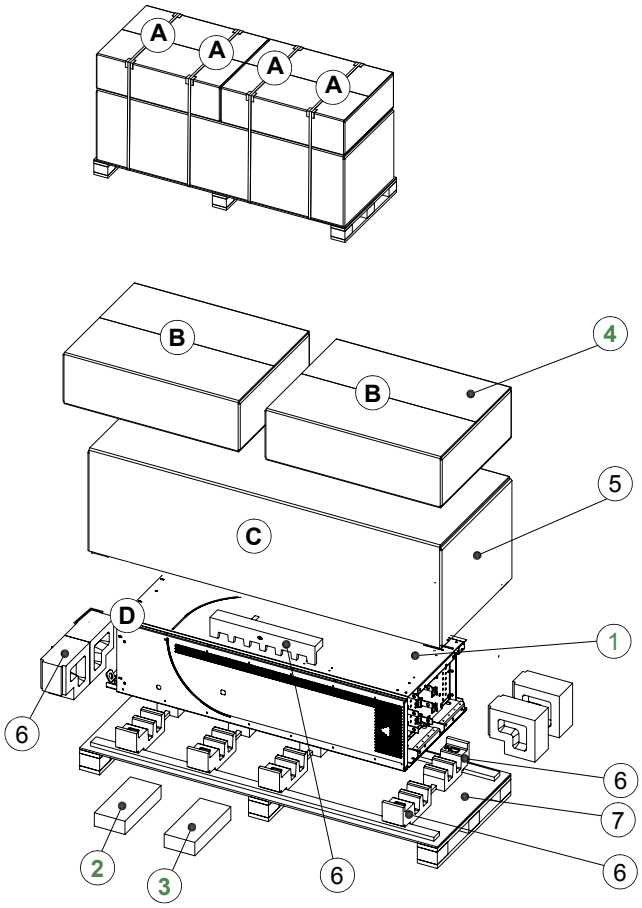

Part no.	Description
1	Drive module with factory installed options and multilingual residual voltage warning sticker
2	Output cable terminals with fastening screws
3	Floor fastening brackets and PE terminals with screws
4	• Control unit with control panel and control cable clamp plate, control panel option (+J410) and factory installed optional modules • Delivery documents • Printed *Quick start-up guide* and manuals CD
5	Sheathing
6	PP cushion
7	Pallet

Unpack the package as follows:

- Cut the bands (A).
- Unpack the additional boxes (B).
- Remove the sheathing by lifting it (C).
- Fasten lifting hooks to the drive module lifting eyes (D) and lift the module to the installation place.

Checking the delivery

Check that all items listed under section *Moving and unpacking the unit* are present.

Check that there are no signs of damage. Before attempting installation and operation, check the information on the type designation label of the drive to verify that the unit is of the correct type.

Attaching the warning stickers

Attach the residual voltage warning sticker of the local language onto the drive module front cover.

Fastening the cable lug terminals to the output busbars

1. Fasten the grounding terminals to the long side plates of the pedestal with screws.
2. Fasten the cable lug terminals to the busbars with screws.

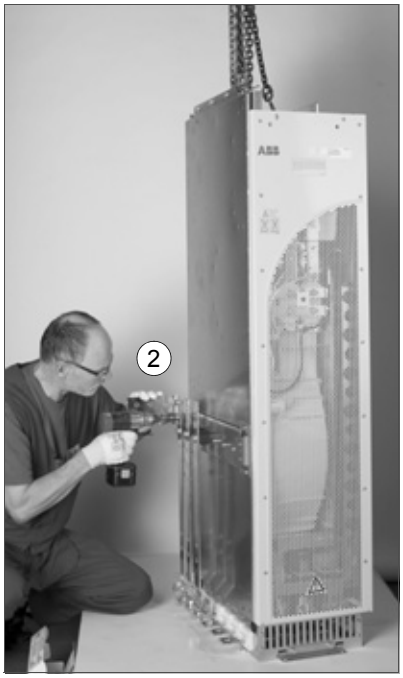

WARNING! See the next page for the screw sizes and tightening torques!

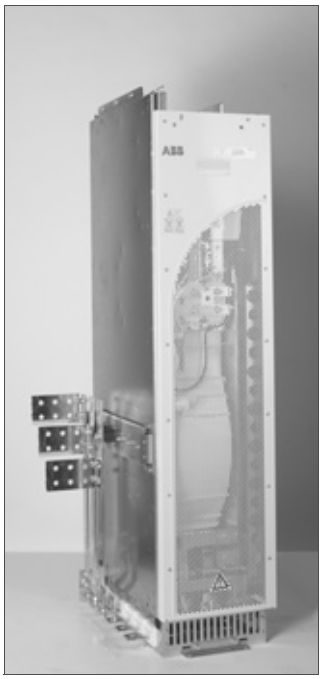

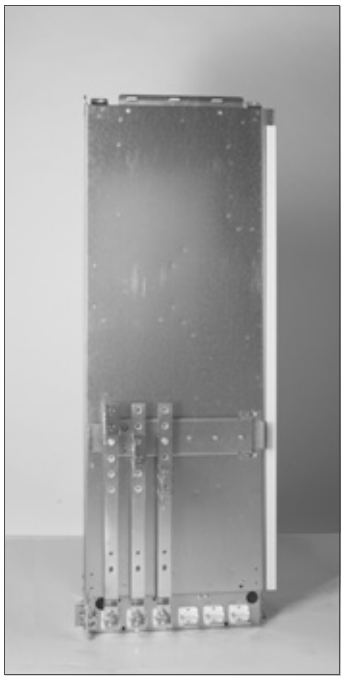

Side view (cable lug terminals fastened)

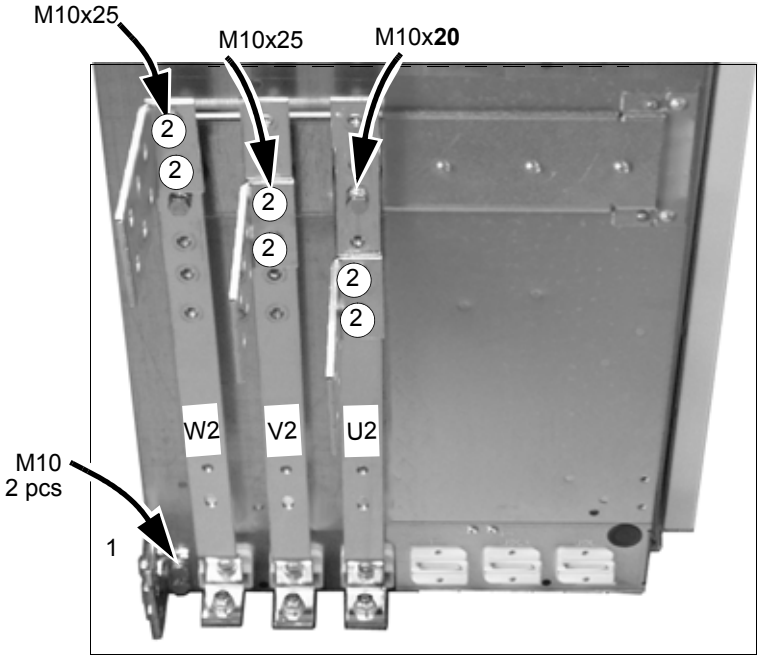

Tightening torques:

M10: 30...44 N·m
(22...32 lbf·ft)

M12: 50...75 N·m
(37...55 lbf·ft)

WARNING! Fasten the output busbars to the insulating supports with M10x20 screws when no cable lug terminal is connected, but with M10x25 screws when a cable lug terminal is connected as well. Screwing an M10x25 screw without a cable lug terminal through the busbar into the insulating support will break the insulating support.

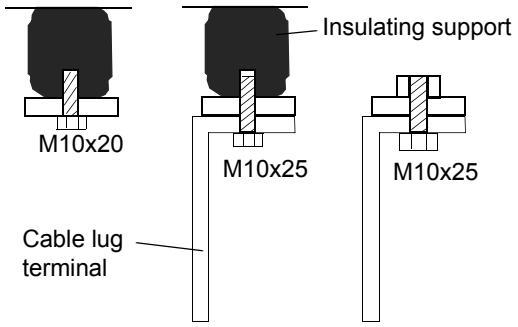

Fastening the drive module to the cabinet base

1. Fasten the front fastening bracket to the drive module pedestal with two screws.
2. Fasten the back fastening bracket onto the cabinet base with two screws.
3. Place the drive module on the cabinet base and push it so that the tabs of the fastening bracket enter the slots in the drive module pedestal.
4. Fasten the front bracket to the base with two screws.

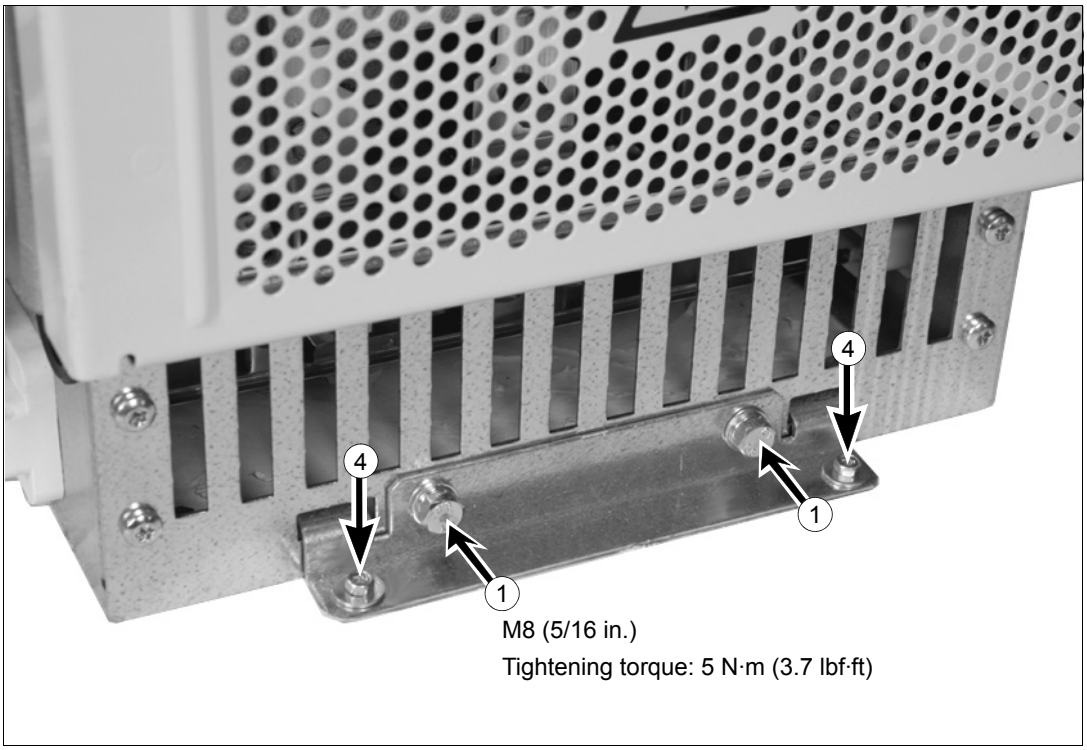

WARNING! Place the module on a solid base. The fastening brackets are not strong enough to carry the weight of the module on their own.

Installing the drive control unit

The drive control unit can be fastened on a mounting plate through the fastening holes in its back or by using a DIN rail. The following drawings show the control unit with front cover but units without covers are installed in the same way.

Mounting through the fastening holes

1. Fasten the fastening screws in the wall.
2. Lift the unit onto the screws.

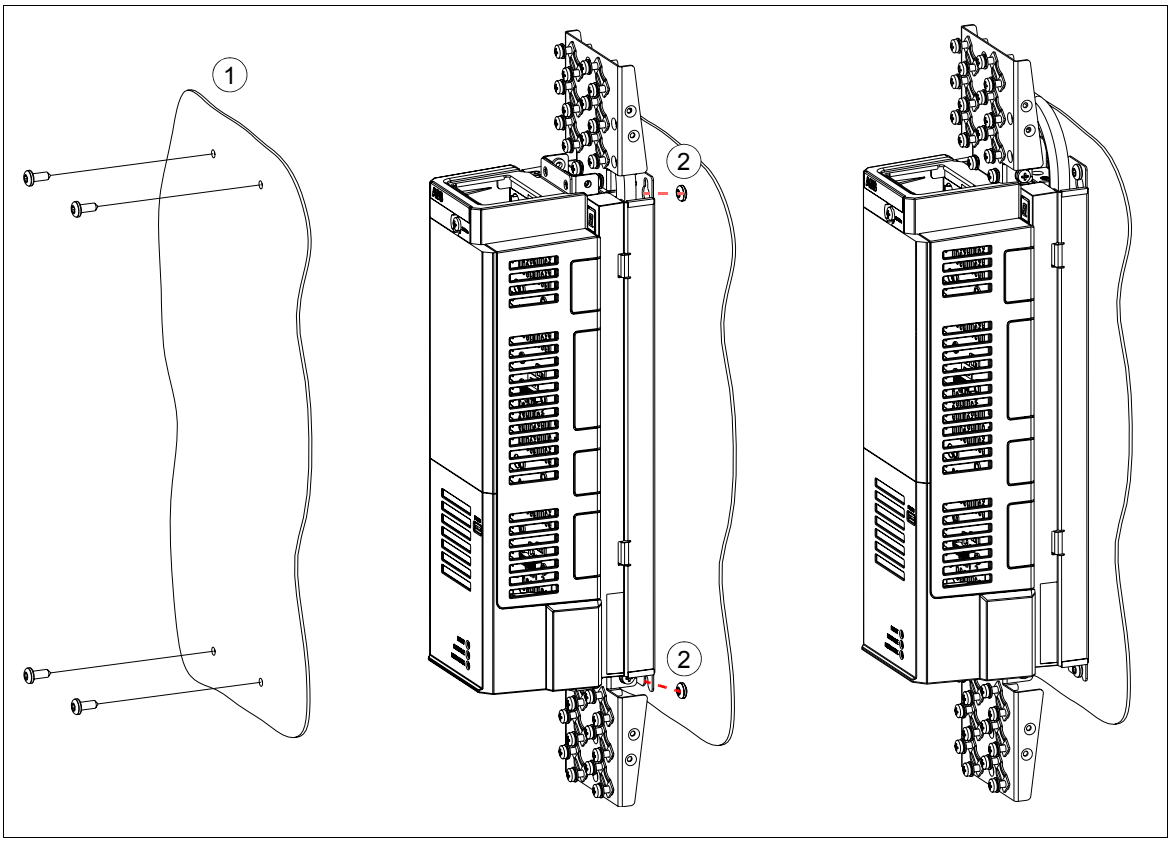

3aua0000038989

Vertical DIN rail mounting

1. Fasten the latch (A) to the back of the control unit with four screws.
2. Click the control unit to the rail as shown below (B).

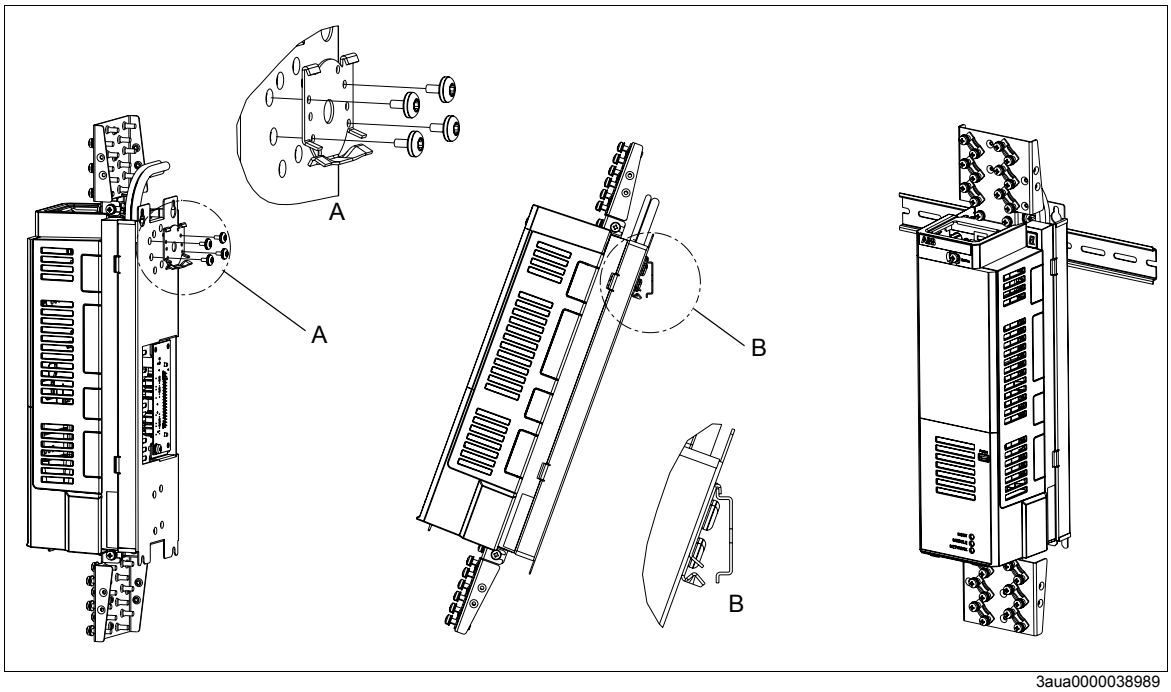

3aua0000038989

Horizontal DIN rail mounting

1. Fasten the latches (A) to the back of the control unit with four screws.
2. Click the control unit to the rail as shown below (B).

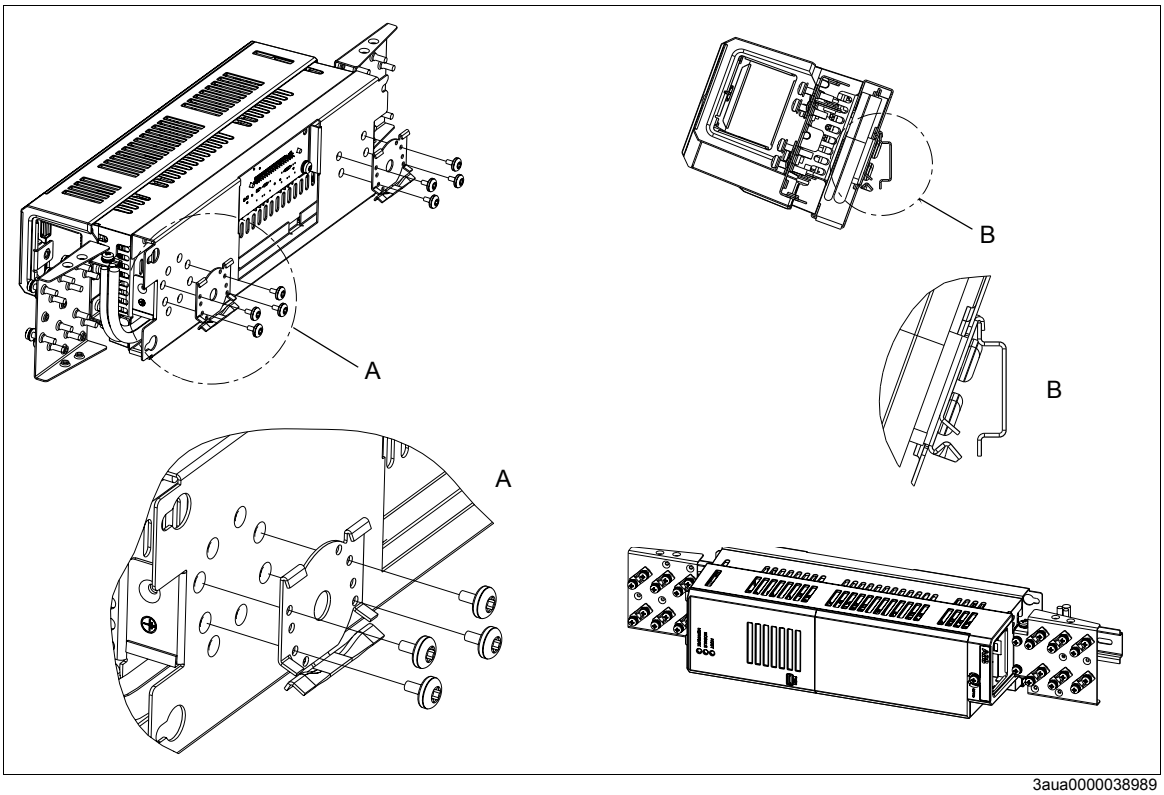

3aua0000038989

6

Planning the electrical installation

What this chapter contains

This chapter contains the instructions that you must follow when selecting the motor, cables, protections, cable routing and way of operation for the drive system.

Note: The installation must always be designed and made according to applicable local laws and regulations. ABB does not assume any liability whatsoever for any installation which breaches the local laws and/or other regulations. Furthermore, if the recommendations given by ABB are not followed, the drive may experience problems that the warranty does not cover.

Selecting the supply disconnecting device (disconnecting means)

Install a hand-operated input disconnecting device (disconnecting means) between the AC power source and the drive. The disconnecting device must be of a type that can be locked to the open position for installation and maintenance work.

European Union

To meet the European Union Directives, according to standard EN 60204-1, *Safety of Machinery*, the disconnecting device must be one of the following types:

- switch-disconnector of utilization category AC-23B (EN 60947-3)
- disconnector that has an auxiliary contact that in all cases causes switching devices to break the load circuit before the opening of the main contacts of the disconnector (EN 60947-3)
- circuit breaker suitable for isolation in accordance with EN 60947-2.

Other regions

The disconnecting device must conform to the applicable safety regulations.

Selecting and dimensioning the main contactor

If a main contactor is used, its utilization category (number of operations under load) must be AC-1 according to IEC 60947-4, *Low-voltage switchgear and controlgear*. Dimension the main contactor according to the nominal voltage and current of the drive.

Protecting the motor insulation and bearings

The drive employs modern IGBT inverter technology. Regardless of frequency, the drive output comprises pulses of approximately the drive DC bus voltage with a very short rise time. The pulse voltage can almost double at the motor terminals, depending on the attenuation and reflection properties of the motor cable and the terminals. This can cause additional stress on the motor and motor cable insulation.

Modern variable speed drives with their fast rising voltage pulses and high switching frequencies can generate current pulses that flow through the motor bearings, which can gradually erode the bearing races and rolling elements.

Optional du/dt filters protect motor insulation system and reduce bearing currents. Common mode filters mainly reduce bearing currents. insulated N-end (non-drive end) bearings protect the motor bearings. See section *Checking the compatibility of the motor and drive* below for the required filters and N-end bearings to be used with the drive. Select and install the cables according to the instructions given in this manual.

Checking the compatibility of the motor and drive

Use an AC induction motor with the drive. Several induction motors can be connected to the drive at a time.

Select the motor and drive according to the rating tables in chapter *Technical data*.

1. Check that the motor ratings lie within the allowed ranges of the drive control program:
2. motor nominal voltage is in the range of 1/2 ... 2 · U_N
3. motor nominal current is 1/3 ... 1 · I_{max} of the drive in DTC control and 0 ... 1 · I_{max} in scalar control. The control mode is selected by a drive parameter.
4. Consult the motor manufacturer before using a motor in a drive system where the motor nominal voltage differs from the AC power source voltage.

5. Ensure that the motor insulation system withstands the maximum peak voltage in the motor terminals. See the *Requirements table* below for the required motor insulation system and drive filtering.

   Example: When the supply voltage is 440 V, the maximum peak voltage in the motor terminals can be approximated as follows: 440 V · 1.35 · 2 = 1190 V. Check that the motor insulation system withstands this voltage.
6. Use insulated N-end (non-drive end) bearings and output filters from ABB according to the *Requirements table* below.

Requirements table

The following table shows how to select the motor insulation system and when an optional ABB du/dt filter, insulated N-end (non-drive end) motor bearings and ABB common mode filters are required. Failure of the motor to fulfil the following requirements or improper installation may shorten motor life or damage the motor bearings and voids the warranty.
Note: The drive is equipped with the common mode filter as standard.

Motor type	**Nominal AC line voltage**	**Requirement for**			
		Motor insulation system	**ABB du/dt filter, insulated N-end bearing and ABB common mode filter**		
			P_N < 100 kW and frame size < IEC 315	**100 kW ≤ P_N < 350 kW** or frame size ≥ IEC 315	**P_N ≥ 350 kW** or frame size ≥ IEC 400
			P_N < 134 hp and frame size < NEMA 500	**134 hp ≤ P_N < 469 hp** or frame size ≥ NEMA 500	**P_N ≥ 469 hp** or frame size > NEMA 580
ABB motors					
Random-wound M2_ and M3_	U_N ≤ 500 V	Standard	-	+ N	+ N + CMF
	500 V < U_N ≤ 600 V	Standard	+ du/dt	+ du/dt + N	+ du/dt + N + CMF
		or			
		Reinforced	-	+ N	+ N + CMF
	600 V < U_N ≤ 690 V	Reinforced	+ du/dt	+ du/dt + N	+ du/dt + N + CMF
Form-wound HX_ and AM_	380 V < U_N ≤ 690 V	Standard	n.a.	+ N + CMF	P_N < 500 kW: + N + CMF
					P_N ≥ 500 kW: + N + CMF + du/dt
Old* form-wound HX_ and modular	380 V < U_N ≤ 690 V	Check with the motor manufacturer.	+ du/dt with voltages over 500 V + N + CMF		
Random-wound HX_ and AM_ **	0 V < U_N ≤ 500 V	Enamelled wire with fiber glass taping	+ N + CMF		
	500 V < U_N ≤ 690 V		+ du/dt + N + CMF		

Motor type	Nominal AC line voltage	Requirement for			
		Motor insulation system	ABB du/dt filter, insulated N-end bearing and ABB common mode filter		
			P_N < 100 kW and frame size < IEC 315	**100 kW ≤ P_N < 350 kW** or frame size ≥ IEC 315	**P_N ≥ 350 kW** or frame size ≥ IEC 400
			P_N < 134 hp and frame size < NEMA 500	**134 hp ≤ P_N < 469 hp** or frame size ≥ NEMA 500	**P_N ≥ 469 hp** or frame size > NEMA 580
Non-ABB motors					
Random-wound and form-wound	U_N ≤ 420 V	Standard: $\hat{U}_{LL}$ = 1300 V	-	+ N or CMF	+ N + CMF
	420 V < U_N ≤ 500 V	Standard: $\hat{U}_{LL}$ = 1300 V	+ du/dt	+ du/dt + N or + du/dt + CMF	+ du/dt + N + CMF
		or			
		Reinforced: $\hat{U}_{LL}$ = 1600 V, 0.2 microsecond rise time	-	+ N or CMF	+ N + CMF
	500 V < U_N ≤ 600 V	Reinforced: $\hat{U}_{LL}$ = 1600 V	+ du/dt	+ du/dt + N or + du/dt + CMF	+ du/dt + N + CMF
		or			
		Reinforced: $\hat{U}_{LL}$ = 1800 V	-	+ N or CMF	+ N + CMF
	600 V < U_N ≤ 690 V	Reinforced: $\hat{U}_{LL}$ = 1800 V	+ du/dt	+ du/dt + N	+ du/dt + N + CMF
		Reinforced: $\hat{U}_{LL}$ = 2000 V, 0.3 microsecond rise time	-	N + CMF	N + CMF

* manufactured before 1.1.1998

** For motors manufactured before 1.1.1998, check for additional instructions with the motor manufacturer.

The abbreviations used in the table are defined below.

Abbr.	Definition
U_N	Nominal voltage of the supply network
$\hat{U}_{LL}$	Peak line-to-line voltage at motor terminals which the motor insulation must withstand
P_N	Motor nominal power
du/dt	du/dt filter at the output of the drive
CMF	Common mode filter
N	N-end bearing: insulated motor non-drive end bearing
n.a.	Motors of this power range are not available as standard units. Consult the motor manufacturer.

Explosion-safe (EX) motors

The motor manufacturer should be consulted regarding the construction of the motor insulation and additional requirements for explosion-safe (EX) motors.

High-output motors and IP 23 motors

For motors with higher rated output than what is stated for the particular frame size in EN 50347 (2001) and for IP23 motors, the requirements of ABB random-wound motor series (for example M3AA, M3AP, M3BP) are given below. For non-ABB motor types, see the *Requirements table* above. Apply the requirements of range **100 kW < P_N < 350 kW** to motors with P_N < 100 kW. Apply the requirements of range **P_N ≥ 350 kW** to motors within the range **100 kW < P_N < 350 kW**. In other cases, consult the motor manufacturer.

Motor type	Nominal mains voltage (AC line voltage)	Requirement for			
		Motor insulation system	ABB du/dt filter, insulated N-end bearing and ABB common mode filter		
			P_N < 100 kW	100 kW ≤ P_N < 200 kW	P_N ≥ 200 kW
			P_N < 140 hp	140 hp ≤ P_N < 268 hp	P_N ≥ 268 hp
ABB motors					
Random-wound	U_N ≤ 500 V	Standard	-	+ N	+ N + CMF
	500 V < U_N ≤ 600 V	Standard	+ du/dt	+ du/dt + N	+ du/dt + N + CMF
		or			
		Reinforced	-	+ N	+ N + CMF
	600 V < U_N ≤ 690 V	Reinforced	+ du/dt	+ du/dt + N	+ du/dt + N + CMF

HXR and AMA motors

All AMA machines (manufactured in Helsinki) for drive systems have form-wound windings. All HXR machines manufactured in Helsinki starting 1.1.1998 have form-wound windings.

ABB motors of types other than M2_, M3_, HX_ and AM_

Use the selection criteria given for non-ABB motors.

Calculating the rise time and the peak line-to-line voltage

The peak line-to-line voltage at the motor terminals generated by the drive as well as the voltage rise time depend on the cable length. The requirements for the motor insulation system given in the requirements table are “worst case” requirements covering installations with 30 meter and longer cables. The rise time can be calculated as follows: $\triangle t = 0.8 \cdot \hat{U}_{LL}/(du/dt)$. Read $\hat{U}_{LL}$ and du/dt from the diagrams below. Multiply the values of the graph by the supply voltage (U_N). In case of drives with resistor braking, the $\hat{U}_{LL}$ and du/dt values are approximately 20% higher.

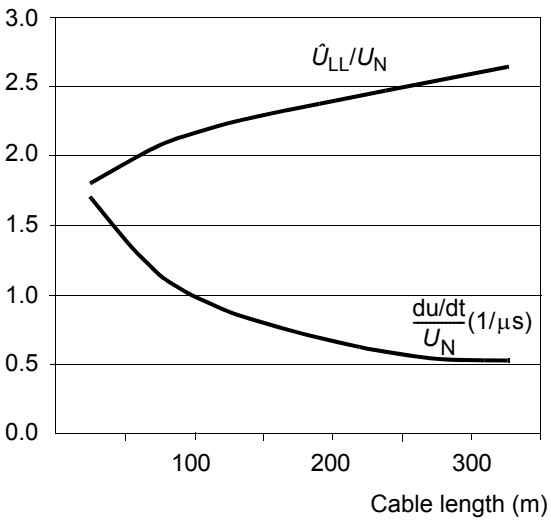

With du/dt filter

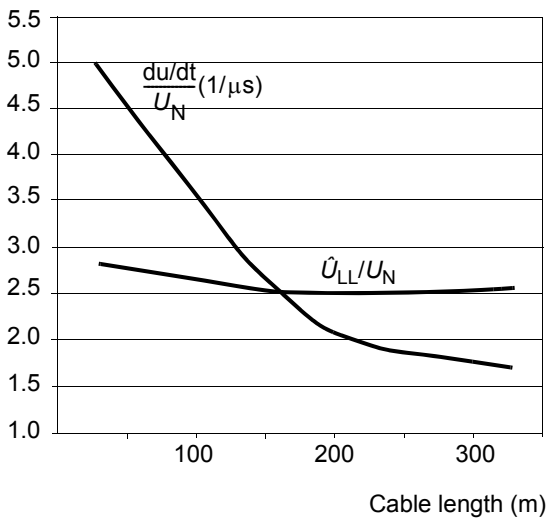

Without du/dt filter

Sine filters

Sine filters protect the motor insulation system. Therefore, du/dt filter can be replaced with a sine filter. The peak phase-to-phase voltage with the sine filter is approximately 1.5 · U_N.

Selecting the power cables

General rules

Dimension the input power and motor cables **according to local regulations**:

- Dimension the cable to carry the drive load current. See chapter *Technical data* for the rated currents.
- Select a cable rated for at least 70 °C maximum permissible temperature of conductor in continuous use. For US, see *Additional US requirements,* page *58.*
- The inductance and impedance of the PE conductor/cable (grounding wire) must be rated according to permissible touch voltage appearing under fault conditions (so that the fault point voltage will not rise excessively when a ground fault occurs).
- 600 V AC cable is accepted for up to 500 V AC

Use symmetrical shielded motor cable, see page *58*. Ground the shield(s) of motor cable(s) 360° at both ends.

Note: When continuous metal conduit is employed, shielded cable is not required. The conduit must have bonding at both ends as with cable shield.

A four-conductor system is allowed for input cabling, but shielded symmetrical cable is recommended. To operate as a protective conductor, the shield conductivity requirements according to IEC 60439-1 are shown below when the protective conductor is made of the same metal as the phase conductors:

Cross-sectional area of the phase conductors **S (mm^2)**	**Minimum cross-sectional area of the corresponding protective conductor** **S_p (mm^2)**
$S \leq 16$	S
$16 < S \leq 35$	16
$35 < S$	S/2

Compared to a four-conductor system, the use of symmetrical shielded cable reduces electromagnetic emission of the whole drive system as well as the stress on motor insulation, bearing currents and wear.

Keep the motor cable and its PE pigtail (twisted shield) as short as possible to reduce high-frequency electromagnetic emissions.

Typical power cable sizes

The table below gives copper and aluminium cable types for different load currents. Cable sizing is based on max. 9 cables laid on a cable ladder side by side, three ladder type trays one on top of the other, ambient temperature 30 °C, PVC insulation, surface temperature 70 °C (EN 60204-1 and IEC 60364-5-52/2001). For other conditions, dimension the cables according to local safety regulations, appropriate input voltage and the load current of the drive.

Copper cables with concentric copper shield		Aluminium cables with concentric copper shield	
Max. load current A	**Cable type** mm^2	**Max. load current** A	**Cable type** mm^2
274	2 × (3×70)	302	2 × (3×120)
334	2 × (3×95)	348	2 × (3×150)
386	2 × (3×120)	398	2 × (3×185)
446	2 × (3×150)	470	2 × (3×240)
510	2 × (3x185)	522	3 × (3×150)
602	2 × (3×240)	597	3 × (3×185)
579	3 × (3×120)	705	3 × (3×240)
669	3 × (3×150)		
765	3 × (3×185)		
903	3 × (3×240)		

3BFA 01051905 C

Typical power cable sizes (US)

Cable sizing is based on NEC Table 310-16 for copper wires, 75 °C (167 °F) wire insulation at 40 °C (104 °F) ambient temperature. Not more than three current-carrying conductors in raceway or cable or earth (directly buried). For other conditions, dimension the cables according to local safety regulations, appropriate input voltage and the load current of the drive.

Copper cables with concentric copper shield	
Max. load current A	**Cable type** AWG/kcmil
273	350 MCM or 2 × 2/0
295	400 MCM or 2 × 2/0
334	500 MCM or 2 × 3/0
370	600 MCM or 2 × 4/0 or 3 × 1/0
405	700 MCM or 2 × 4/0 or 3 × 2/0
449	2 × 250 MCM or 3 × 2/0
502	2 × 300 MCM or 3 × 3/0
546	2 × 350 MCM or 3 × 4/0
590	2 × 400 MCM or 3 × 4/0
669	2 × 500 MCM or 3 × 250 MCM
739	2 × 600 MCM or 3 × 300 MCM
810	2 × 700 MCM or 3 × 350 MCM
884	3 × 400 MCM or 4 × 250 MCM
1003	3 × 500 MCM or 4 × 300 MCM
1109	3 × 600 MCM or 4 × 400 MCM
1214	3 × 700 MCM or 4 × 500 MCM

Alternative power cable types

The power cable types that can be used with the drive are represented below.

Recommended

Symmetrical shielded cable: three phase conductors and a concentric or otherwise symmetrically constructed PE conductor, and a shield

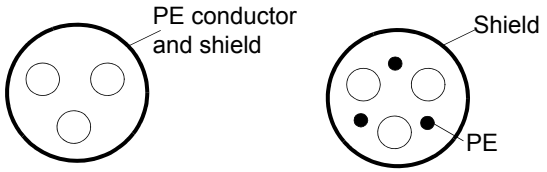

A separate PE conductor is required if the conductivity of the cable shield is < 50% of the conductivity of the phase conductor.

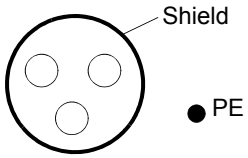

A four-conductor system: three phase conductors and a protective conductor

Not allowed for motor cables

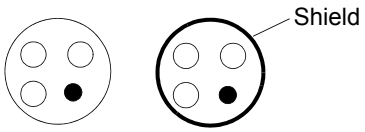

Not allowed for motor cables with phase conductor cross section larger than 10 mm^2 (motors > 30 kW [40 hp]).

Motor cable shield

To effectively suppress radiated and conducted radio-frequency emissions, the cable shield conductivity must be at least 1/10 of the phase conductor conductivity. The requirements are easily met with a copper or aluminium shield. The minimum requirement of the motor cable shield of the drive is shown below. It consists of a concentric layer of copper wires with an open helix of copper tape or copper wire. The better and tighter the shield, the lower the emission level and bearing currents.

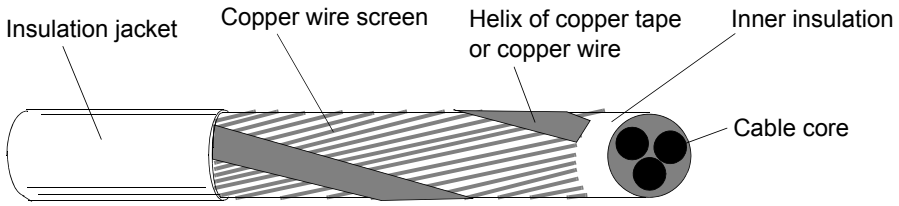

Additional US requirements

Use type MC continuous corrugated aluminum armor cable with symmetrical grounds or shielded power cable for the motor cables if metallic conduit is not used. For the North American market, 600 V AC cable is accepted for up to 500 V AC. For drives rated over 100 amperes, the power cables must be rated for 75 °C (167 °F).

Conduit

Couple separate parts of a conduit together: bridge the joints with a ground conductor bonded to the conduit on each side of the joint. Bond the conduits also to the drive enclosure and motor frame. Use separate conduits for input power, motor, brake resistor, and control wiring. When conduit is employed, type MC continuous corrugated aluminium armor cable or shielded cable is not required. A dedicated ground cable is always required.

Note: Do not run motor wiring from more than one drive in the same conduit.

Armored cable / shielded power cable

Six conductor (3 phases and 3 ground) type MC continuous corrugated aluminum armor cable with symmetrical grounds is available from the following suppliers (trade names in parentheses):

- Anixter Wire & Cable (Philsheath)
- BICC General Corp (Philsheath)
- Rockbestos Co. (Gardex)
- Oaknite (CLX).

Shielded power cables are available from Belden, LAPPKABEL (ÖLFLEX) and Pirelli.

Selecting the control cables

Shielding

All control cables must be shielded.

Use a double-shielded twisted pair cable for analogue signals. This type of cable is recommended for the pulse encoder signals also. Employ one individually shielded pair for each signal. Do not use common return for different analogue signals.

A double-shielded cable is the best alternative for low-voltage digital signals but single-shielded twisted pair cable (Figure b) is also usable.

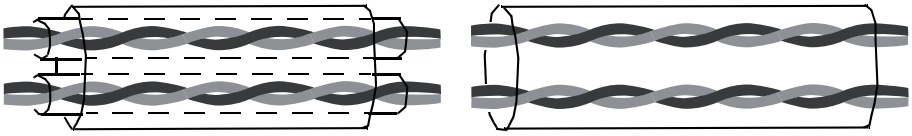

a
Double-shielded twisted pair cable

b
Single-shielded twisted pair cable

Signals in separate cables

Run analogue and digital signals in separate, shielded cables.

Never mix 24 V DC and 115/230 V AC signals in the same cable.

Signals allowed to be run in the same cable

Relay-controlled signals, providing their voltage does not exceed 48 V, can be run in the same cables as digital input signals. It is recommended that the relay-controlled signals be run as twisted pairs.

Relay cable type

The cable type with braided metallic screen (for example ÖLFLEX by LAPPKABEL, Germany) has been tested and approved by ABB.

Control panel cable length and type

In remote use, the cable connecting the control panel to the drive must not exceed 3 meters (10 ft). The cable type tested and approved by ABB is used in control panel option kits.

Routing the cables

Route the motor cable away from other cable routes. Motor cables of several drives can be run in parallel installed next to each other. It is recommended that the motor cable, input power cable and control cables be installed on separate trays. Avoid long parallel runs of motor cables with other cables in order to decrease electromagnetic interference caused by the rapid changes in the drive output voltage.

Where control cables must cross power cables ensure they are arranged at an angle as near to 90 degrees as possible. Do not run extra cables through the drive.

The cable trays must have good electrical bonding to each other and to the grounding electrodes. Aluminium tray systems can be used to improve local equalizing of potential.

A diagram of the cable routing is shown below.

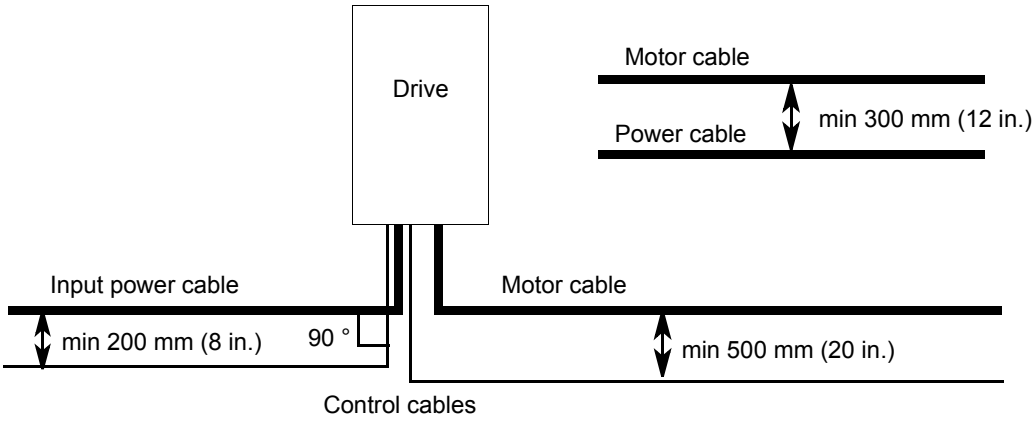

Separate control cable ducts

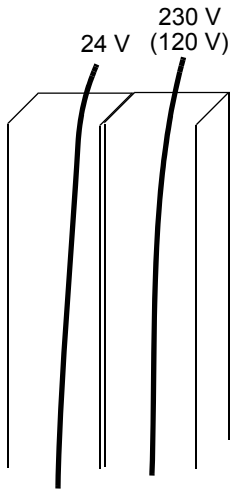

Lead 24 V and 230 V (120 V) control cables in separate ducts inside the cabinet.

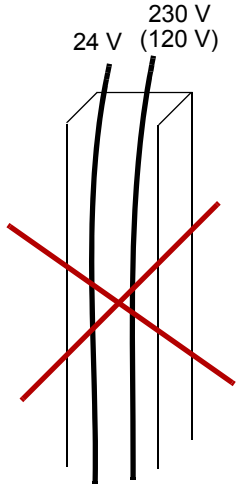

Not allowed unless the 24 V cable is insulated for 230 V (120 V) or insulated with an insulation sleeving for 230 V (120 V).

Continuous motor cable shield or enclosure for equipment in the motor cable

To minimize the emission level when safety switches, contactors, connection boxes or similar equipment are installed in the motor cable between the drive and the motor:

- European Union: Install the equipment in a metal enclosure with 360 degrees grounding for the shields of both the incoming and outgoing cable, or connect the shields of the cables otherwise together.
- US: Install the equipment in a metal enclosure in a way that the conduit or motor cable shielding runs consistently without breaks from the drive to the motor.

Implementing thermal overload and short-circuit protection

Protecting the drive and input power cable in short-circuits

Protect the drive and input cable with fuses or a circuit breaker as follows:

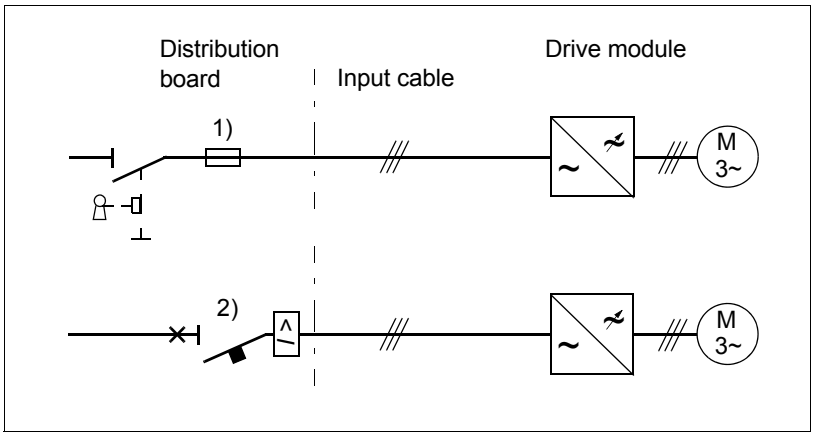

1. Size the fuses according to instructions given in chapter *Technical data.* The fuses will protect the input cable in short-circuit situations, restrict drive damage and prevent damage to adjoining equipment in case of a short-circuit inside the drive.
2. Circuit breakers which have been tested by ABB with the drive can be used. Fuses must be used with other circuit breakers. Contact your local ABB representative for the approved breaker types and supply network characteristics.

   The protective characteristics of circuit breakers depend on the type, construction and settings of the breakers. There are also limitations pertaining to the short-circuit capacity of the supply network.

WARNING! Due to the inherent operating principle and construction of circuit breakers, independent of the manufacturer, hot ionized gases may escape from the breaker enclosure in case of a short-circuit. To ensure safe use, special attention must be paid to the installation and placement of the breakers. Follow the manufacturer's instructions.

Note: Circuit breakers must not be used without fuses in the USA.

Protecting the motor and motor cable in short-circuits

The drive protects the motor cable and motor in a short-circuit situation when the motor cable is dimensioned according to the nominal current of the drive. No additional protection devices are needed.

Protecting the drive and the input power and motor cables against thermal overload

The drive protects itself and the input and motor cables against thermal overload when the cables are dimensioned according to the nominal current of the drive. No additional thermal protection devices are needed.

WARNING! If the drive is connected to multiple motors, a separate thermal overload switch or a circuit breaker must be used for protecting each cable and motor. These devices may require a separate fuse to cut off the short-circuit current.

Protecting the motor against thermal overload

According to regulations, the motor must be protected against thermal overload and the current must be switched off when overload is detected. The drive includes a motor thermal protection function that protects the motor and switches off the current when necessary. Depending on a drive parameter value, the function either monitors a calculated temperature value (based on a motor thermal model) or an actual temperature indication given by motor temperature sensors. The user can tune the thermal model further by feeding in additional motor and load data.

The most common temperature sensors are:

- motor sizes IEC180…225: thermal switch eg, Klixon
- motor sizes IEC200…250 and larger: PTC or Pt100.

See the *Firmware manual* for more information on the motor thermal protection, and the connection and use of the temperature sensors.

Protecting the drive against ground faults

The drive is equipped with an internal ground fault protective function to protect the unit against ground faults in the motor and motor cable. This is not a personnel safety or a fire protection feature. The ground fault protective function can be disabled with a parameter, refer to the appropriate *Firmware manual*.

Measures for protection in case of direct or indirect contact, such as separation from the environment by double or reinforced insulation or isolation from the supply system by a transformer, can be applied.

Residual current device compatibility

The drive is suitable to be used with residual current devices of Type B.

Note: The EMC filter of the drive includes capacitors connected between the main circuit and the frame. These capacitors and long motor cables increase the ground leakage current and may cause fault current circuit breakers to function.

Implementing the Emergency stop function

For safety reasons, install the emergency stop devices at each operator control station and at other operating stations where emergency stop may be needed.

Note: Pressing the stop key ( ) on the control panel of the drive does not generate an emergency stop of the motor or separate the drive from dangerous potential.

Implementing the Safe torque off function

The drive supports the Safe torque off function according to standards EN 61800-5-2:2007; EN 954-1:1997; IEC/EN 60204-1:1997; EN 61508:2002 and EN 1037:1996.

The Safe torque off function disables the control voltage of the power semiconductors of the drive output stage, thus preventing the inverter from generating the voltage required to rotate the motor (see diagram below). By using this function, short-time operations (like cleaning) and/or maintenance work on non-electrical parts of the machinery can be performed without switching off the power supply to the drive.

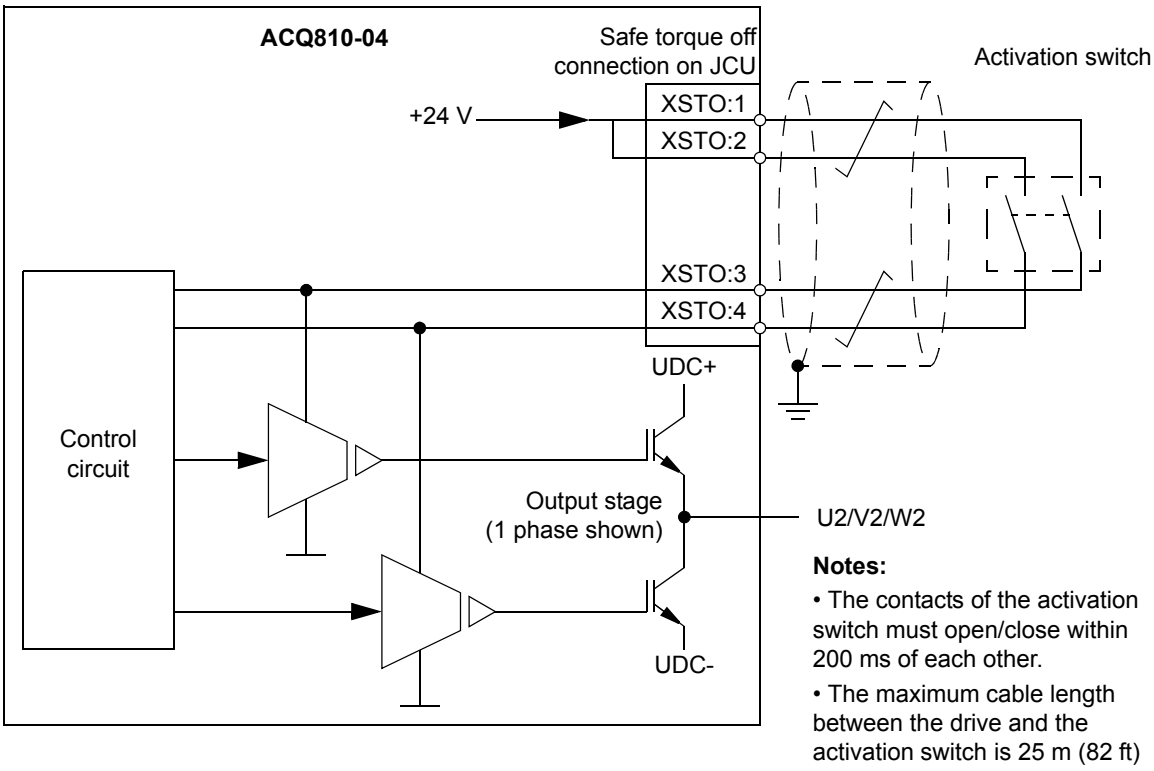

WARNING! The Safe torque off function does not disconnect the voltage of the main and auxiliary circuits from the drive. Therefore maintenance work on electrical parts of the drive or the motor can only be carried out after isolating the drive system from the main supply.

Note: It is not recommended to stop the drive by using the Safe torque off function. If a running drive is stopped by using the Safe torque off function, the drive will stop by coasting. If this causes danger or is not acceptable, the drive and machinery must be stopped using the appropriate stopping mode before using the Safe torque off function.

Implementing the Power-loss ride-through function

The Power-loss ride-through function is activated when parameter *47.02 Undervolt ctrl* is set to *Enable* (default in Standard pump control program).

Note: If the drive is equipped with a line contactor, it opens in a power loss and must be closed again by a time relay.

Using power factor compensation capacitors with the drive

Power factor compensation is not needed with AC drives. However, if a drive is to be connected in a system with compensation capacitors installed, note the following restrictions.

WARNING! Do not connect power factor compensation capacitors or harmonic filters to the motor cables (between the drive and the motor). They are not meant to be used with AC drives and can cause permanent damage to the drive or themselves.

If there are power factor compensation capacitors in parallel with the three phase input of the drive:

1. Do not connect a high-power capacitor to the power line while the drive is connected. The connection will cause voltage transients that may trip or even damage the drive.
2. If capacitor load is increased/decreased step by step when the AC drive is connected to the power line, ensure that the connection steps are low enough not to cause voltage transients that would trip the drive.
3. Check that the power factor compensation unit is suitable for use in systems with AC drives ie, harmonic generating loads. In such systems, the compensation unit should typically be equipped with a blocking reactor or harmonic filter.

Using a contactor between the drive and the motor

Arrange the control of the output contactor by applying one of the alternatives described below.

Alternative 1: When you have selected to use the default motor control mode (DTC) and motor coast stop in the drive, open the contactor as follows:

1. Give a stop command to the drive.
2. Open the contactor.

Alternative 2: When you have selected to use the default motor control mode (DTC) and motor ramp stop in the drive, open the contactor as follows:

1. Give a stop command to the drive.
2. Wait until the drive decelerates the motor to zero speed.
3. Open the contactor.

Alternative 3: When you have selected to use the scalar motor control mode in the drive, open the contactor as follows:

1. Give a stop command to the drive.
2. Open the contactor.

WARNING! When you have the default motor control mode (DTC) in use, never open the output contactor while the drive rotates the motor. The DTC motor control operates extremely fast, much faster than it takes for the contactor to open its contacts. When the contactor starts opening while the drive rotates the motor, the DTC will try to maintain the load current by immediately increasing the drive output voltage to the maximum. This will damage, or even burn the contactor completely.

Implementing a bypass connection

If bypassing is required, employ mechanically or electrically interlocked contactors between the motor and the drive and between the motor and the power line. Ensure with the interlocking that the contactors cannot be closed simultaneously.

Follow this control sequence:

1. Stop the drive.
2. Stop the motor.
3. Open the contactor between the drive and the motor.
4. Close the contactor between the motor and the power line.

An example bypass connection is shown below.

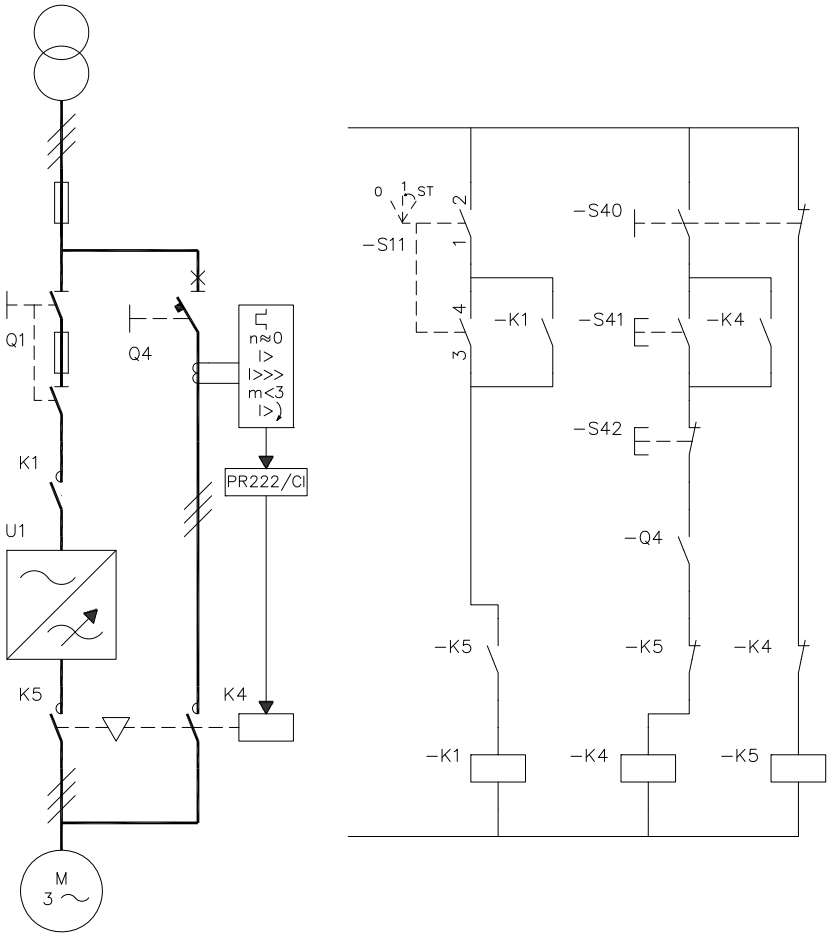

Switch	Description
S11	Drive main contactor on/off control
S40	Motor power supply selection (drive or direct on line)
S41	Start when motor is connected on line
S42	Stop when motor is connected direct on line

WARNING! Never connect the supply power to the drive output terminals U2, V2 and W2. Line voltage applied to the output can result in permanent damage to the unit.

Protecting the contacts of relay outputs

Inductive loads (relays, contactors, motors) cause voltage transients when switched off.

The relay contacts on the JCU Control Unit are protected with varistors (250 V) against overvoltage peaks. In spite of this, it is highly recommended to equip inductive loads with noise attenuating circuits (varistors, RC filters (AC) or diodes (DC)) in order to minimize the EMC emission at switch-off. If not suppressed, the disturbances may connect capacitively or inductively to other conductors in the control cable and form a risk of malfunction in other parts of the system.

Install the protective component as close to the inductive load as possible. Do not install protective components at the relay outputs.

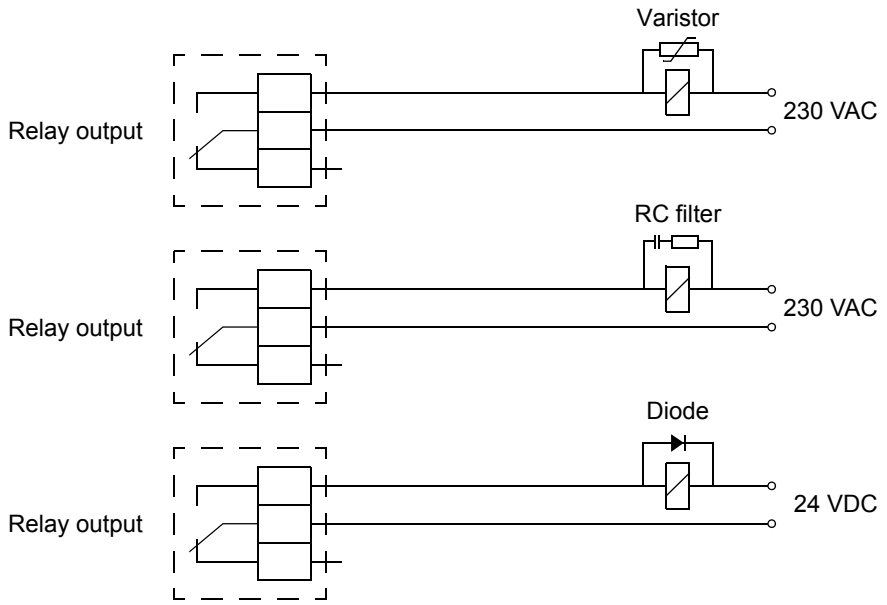

Connecting a motor temperature sensor to the drive I/O

WARNING! IEC 60664 requires double or reinforced insulation between live parts and the surface of accessible parts of electrical equipment which are either non-conductive or conductive but not connected to the protective earth.

To fulfil this requirement, the connection of a thermistor (and other similar components) to the digital inputs of the drive can be implemented in three alternate ways:

1. There is double or reinforced insulation between the thermistor and live parts of the motor.
2. Circuits connected to all digital and analogue inputs of the drive are protected against contact and insulated with basic insulation (the same voltage level as the drive main circuit) from other low voltage circuits.
3. An external thermistor relay is used. The insulation of the relay must be rated for the same voltage level as the main circuit of the drive. For connection, see *Firmware manual*.

Considering the PELV on installation sites above 2000 meters (6562 feet)

WARNING! Do not use a voltage greater than 48 V for the relay outputs of the drive module at installation sites above 2000 meters (6562 feet). Use of a voltage greater than 48 V may damage the drive and cause equipment malfunction and can cause physical injury. The Protective Extra Low Voltage (PELV) requirements are not fulfilled if a relay output is used with a voltage greater than 48 V.

Example circuit diagram

See page *129*.

7

Electrical installation

What this chapter contains

This chapter instructs in the cabling of the drive.

Warnings

WARNING! Only qualified electricians are allowed to carry out the work described in this chapter. Follow the *Safety instructions* on the first pages of this manual. Ignoring the safety instructions can cause physical injury or death.

Checking the insulation of the assembly

Drive

Every drive module has been tested for insulation between the main circuit and the chassis (2500 V rms 50 Hz for 1 second) at the factory. Therefore, do not make any voltage tolerance or insulation resistance tests for example, hi-pot or megger, on any part of the drive.

Input power cable

Check the insulation of the input cable according to local regulations before connecting it to the drive.

Motor and motor cable

Check the insulation of the motor and motor cable as follows:

1. Check that the motor cable is disconnected from the drive output terminals U2, V2 and W2.
2. Measure the insulation resistance between each phase conductor and the Protective Earth conductor using a measuring voltage of 500 V DC. The insulation resistance of an ABB motor must exceed 100 Mohm (reference value at 25 °C or 77 °F). For the insulation resistance of other motors, please consult the manufacturer's instructions.
   Note: Moisture inside the motor casing will reduce the insulation resistance. If moisture is suspected, dry the motor and repeat the measurement.

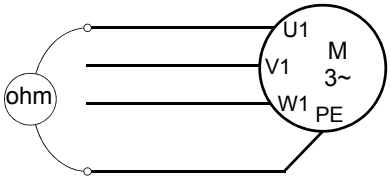

Connecting the power cables

Connection diagram

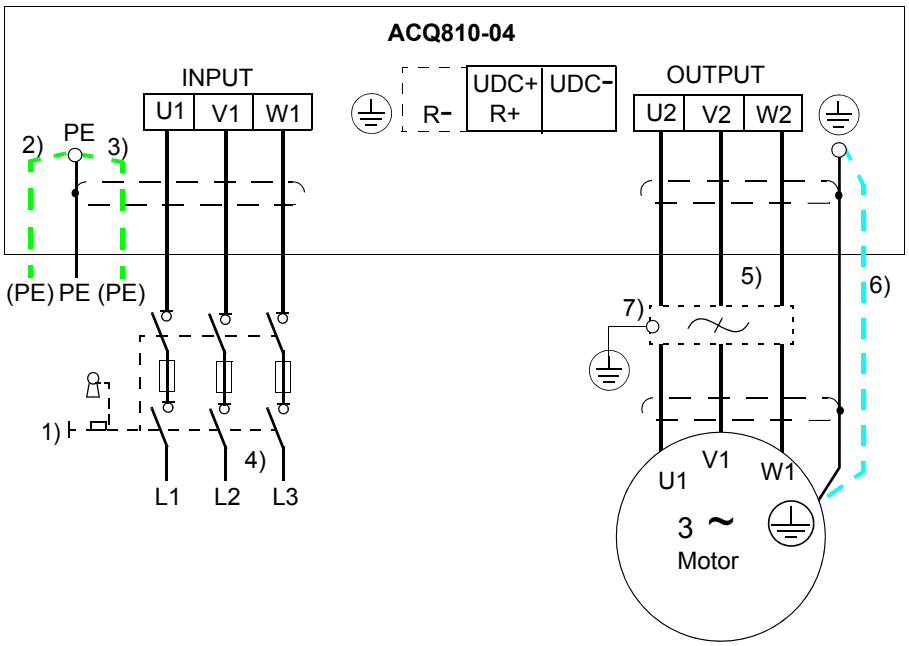

1. For alternatives, see section *Selecting the supply disconnecting device (disconnecting means)* on page *51.*
2. If shielded cable is used (not required but recommended) and the conductivity of the shield is < 50% of the conductivity of the phase conductor, use a separate PE cable (2) or a cable with a grounding conductor (3).
3. as 2)
4. 360 degrees grounding is recommended at the cabinet entry if shielded cable is used. Ground the other end of the input cable shield or PE conductor at the distribution board.
5. 360 degrees grounding at the cabinet entry is recommended, see page *35.*
6. Use a separate grounding cable if the conductivity of the cable shield is < 50% of the conductivity of the phase conductor and there is no symmetrically constructed grounding conductor in the cable (see page *58*).
7. du/dt filter or sine filter (optional, see page *131*).

Note:

If there is a symmetrically constructed grounding conductor in the motor cable in addition to the conductive shield, connect the grounding conductor to the grounding terminal at the drive and motor ends.

Do not use an asymmetrically constructed motor cable. Connecting its fourth conductor at the motor end increases bearing currents and causes extra wear.

Input cable connection procedure

Connect the input cable phase conductors to the drive module terminals U1, V1 and W1 and the PE conductor to the PE terminal. Connect the twisted shield of the input cable to the PE terminal even if it is not used as the PE conductor.

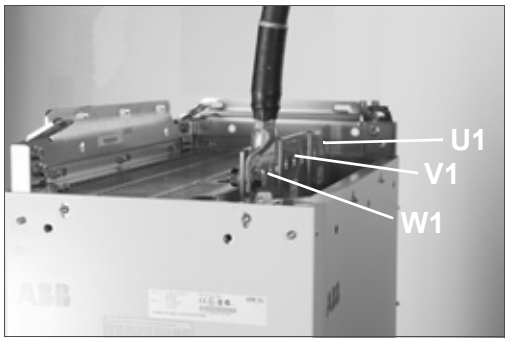

Removing the protective covering

The protective covering on top of the drive module prevents dust from borings and grindings from entering the module when installing. The covering is used because electrically conductive dust inside the unit may cause damage or malfunctioning.

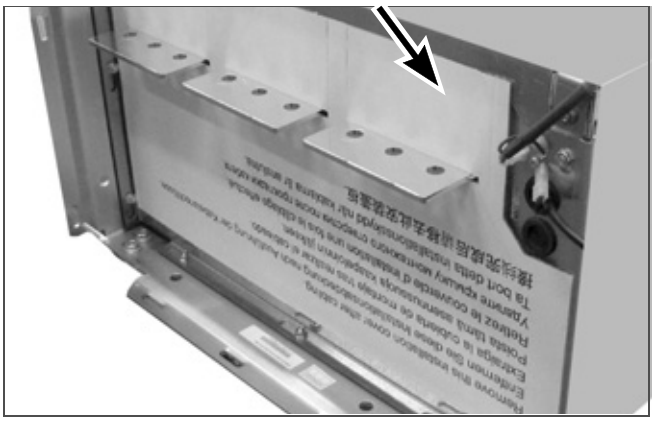

WARNING! Remove the protective covering from the top of the drive module after the installation. If the covering is not removed, the cooling air cannot flow freely through the module and the drive will run to overtemperature.

Motor cable connection procedure

1. Connect the twisted shield of the motor cable to the grounding terminal with a cable lug.
2. Connect the phase conductors to the cable lug terminals U2, V2 and W2.

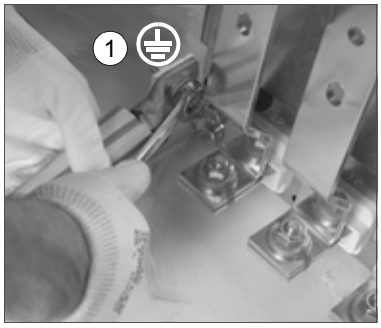

It is recommended to ground the motor cable shield 360° at the cabinet cable entry, see page *37*.

For minimum radio frequency interference, ground the motor cable shield at the motor end as follows:

- 360 degrees at the lead-through of the motor terminal box

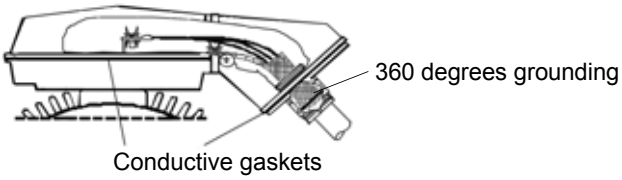

- or by twisting the shield as follows: flattened width ≥ 1/5 · length.

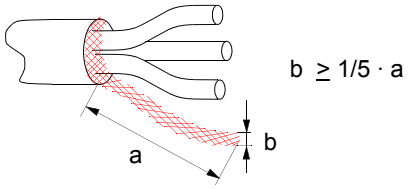

DC connection

The UDC+ and UDC– terminals are intended for common DC configurations of a number of drives, allowing regenerative energy from one drive to be utilized by the other drives in motoring mode. Contact your local ABB representative for further instructions.

Checking the settings of the cooling fan transformer

The voltage transformer of the cooling fan is located at the top right-hand corner of the drive module. Remove the front cover for adjusting the settings and replace the cover after setting.

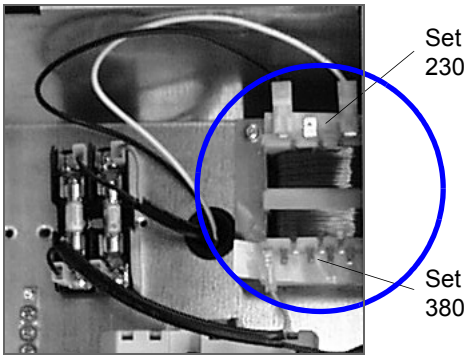

Set to 220 V if the supply frequency is 60 Hz. Set to 230 V if the supply frequency is 50 Hz.

Set according to the supply voltage range: 380 V, 400 V, 415 V, 440 V or 480 V

Removing the cover assembly

The cover assembly needs to be removed before the installation of optional modules and the connection of control cabling. Follow this procedure to remove the cover assembly. The numbers refer to the illustrations below.

- Press the tab (1) slightly with a screwdriver.
- Slide the lower cover plate slightly downwards and pull it out (2).
- Disconnect the panel cable (3) if present.
- Remove the screw (4) at the top of the cover assembly.
- Carefully pull the lower part of the base outwards by the two tabs (5).

Refit the cover in reverse order to the above procedure.

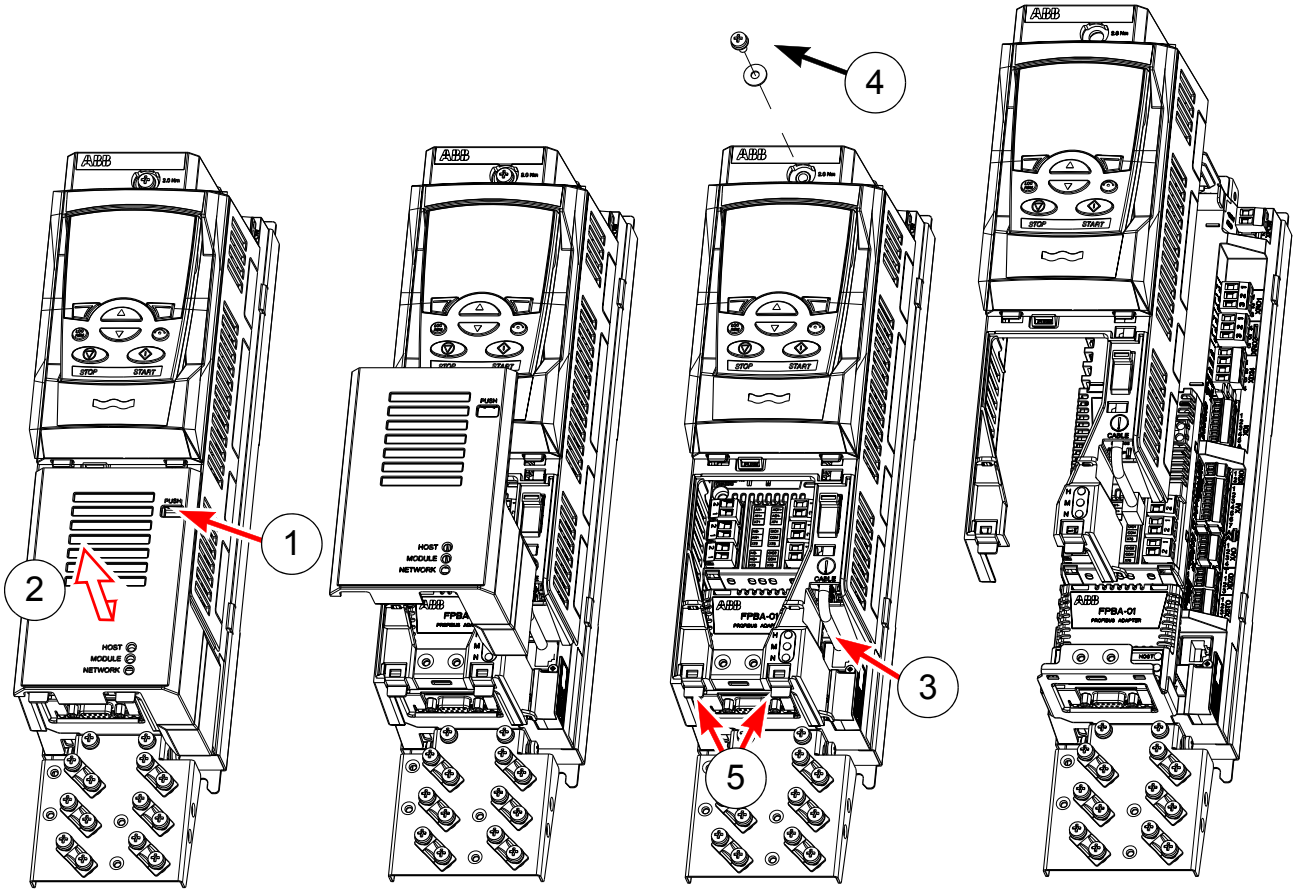

Fastening the control cable clamp plate

Fasten the control cable clamp plate either to the top or base of the control unit with four screws as shown below.

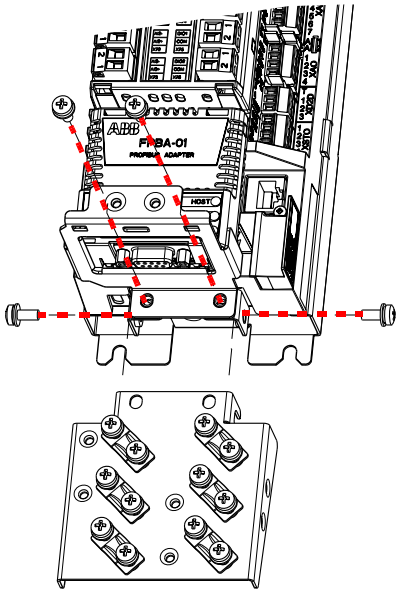

0.7 N·m
(6.2 lbf·in)

Grounding the control unit

If the control unit is not grounded through DIN rail mounting, connect the APOW cable grounding wire to the grounding terminal at the back top or bottom of the control unit.

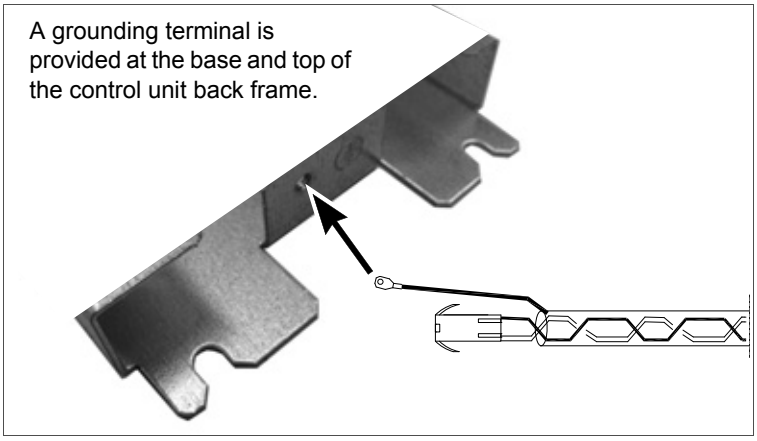

Connecting the control unit to the drive module

Connect the control unit to the drive module as follows.

WARNING! Handle the fiber optic cables with care. When unplugging optic cables, always grab the connector, not the cable itself. Do not touch the ends of the fibers with bare hands as the fiber is extremely sensitive to dirt.

1. Lift the control unit from the mounting place, turn it upside down and thread the fiber optic cables inside the back frame of the unit as shown below.

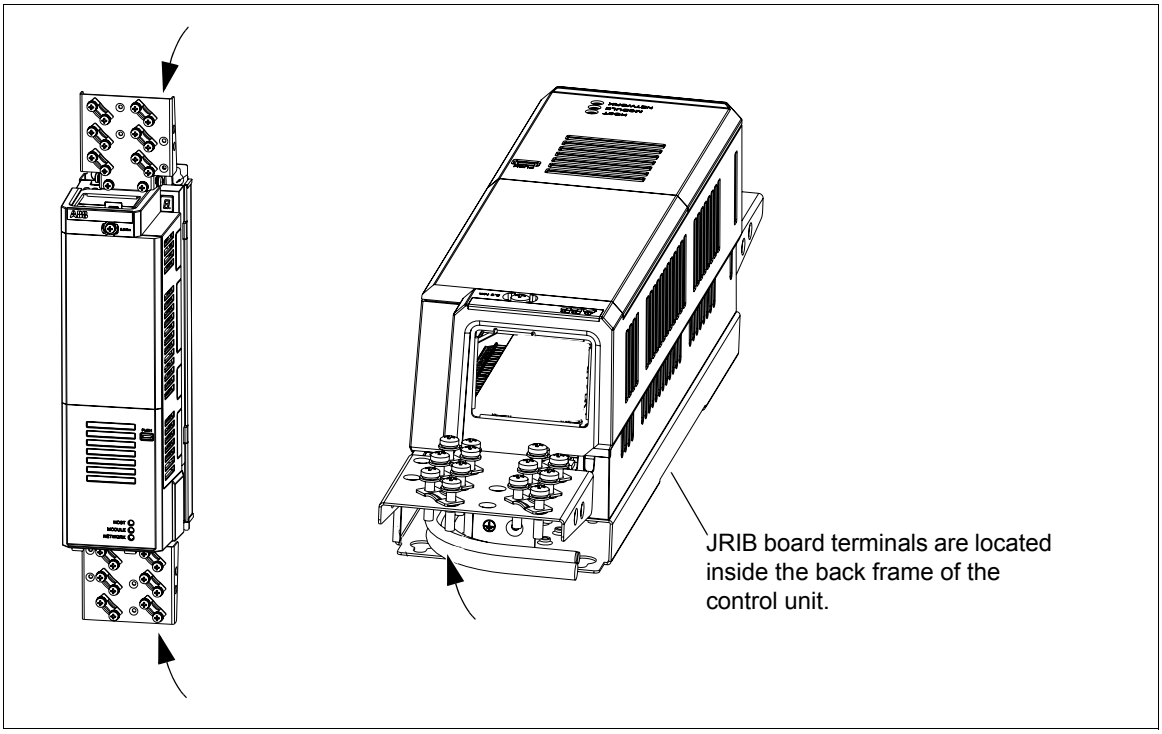

3AUA0000038989

2. Insert the fiber optic cables to the JRIB board terminals.
3. Connect the power supply cable coming from the drive module to the cable connected to the JRIB board terminals.

Connection table	
APOW	JRIB
X3: 1	X202: 1
X3: 2	X202: 2
JINT	JRIB
V1	V1
V2	V2
V6	V6
V7	V7

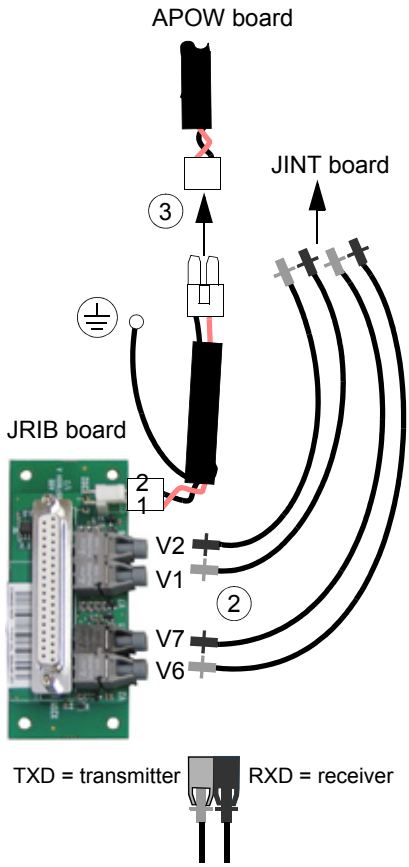

Connecting the control cables

See sections *Default I/O connection diagram* and *Control cable connection procedure* below.

Default I/O connection diagram

Notes:

[…] denotes default setting with ACQ810 standard pump control program (*Factory defs* macro). See *Firmware manual* for other macros.

*Total maximum current: 200 mA

The wiring shown is for demonstrative purposes only. Further information of the usage of the connectors and jumpers are given in the text; see also the chapter *Technical data*.

Wire sizes and tightening torques:

XPOW, XRO1, XRO2, XD24:
0.5 … 2.5 mm^2 (24…12 AWG). Torque: 0.5 N·m (5 lbf·in)

XDI, XDIO, XAI, XAO, XD2D, XSTO:
0.5 … 1.5 mm^2 (28…14 AWG). Torque: 0.3 N·m (3 lbf·in)

Order of terminal headers and jumpers

XPOW
(2-pole, 2.5 mm^2)

XRO1
(3-pole, 2.5 mm^2)

XRO2
(3-pole, 2.5 mm^2)

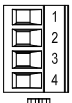
XD24
(4-pole, 2.5 mm^2)

DI/DIO grounding selection

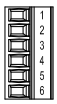
XDI
(6-pole, 1.5 mm^2)

XDIO
(2-pole, 1.5 mm^2)

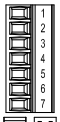
XAI
(7-pole, 1.5 mm^2)

AI1, AI2

XAO
(4-pole, 1.5 mm^2)

T

XD2D
(3-pole, 1.5 mm^2)

XSTO (orange)
(4-pole, 1.5 mm^2)

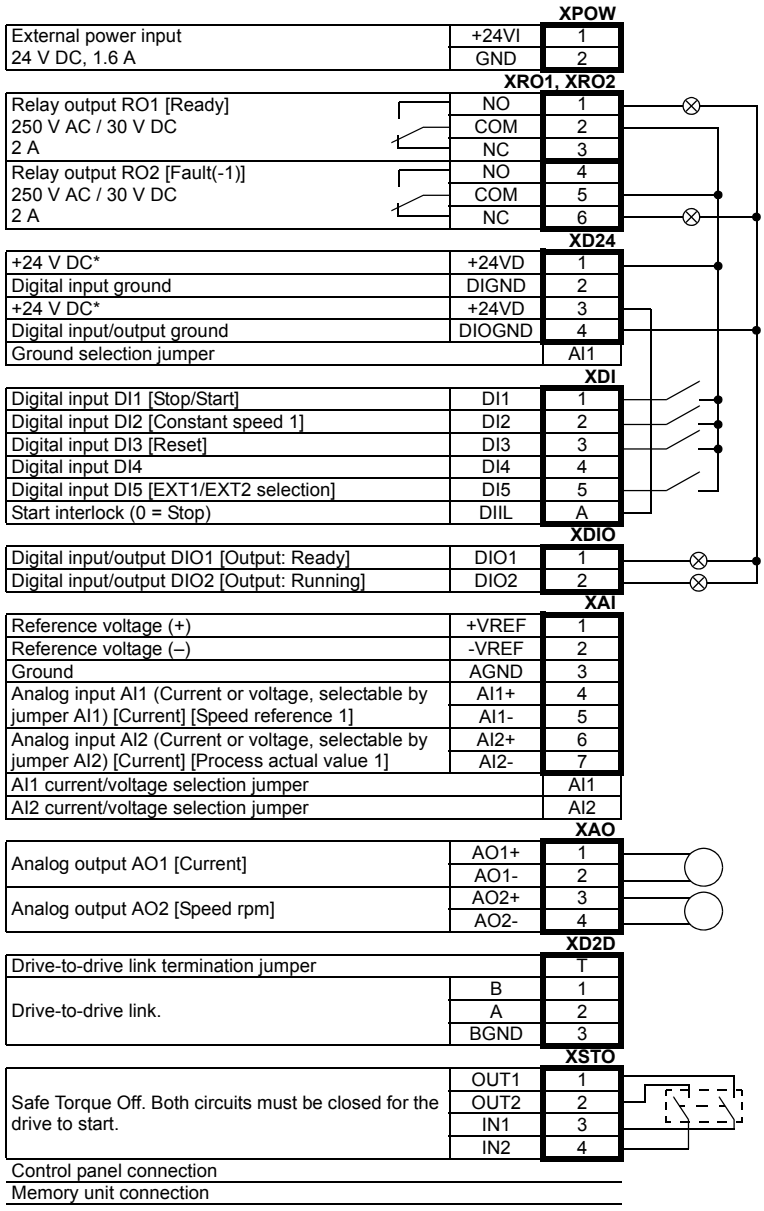

Jumpers

DI/DIO grounding selector (located between XD24 and XDI) – Determines whether the DIGND (ground for digital inputs DI1…DI4) floats, or if it is connected to DIOGND (ground for DI5 DIO1 and DIO2). See the JCU isolation and grounding diagram on page *115*.

If DIGND floats, the common of digital inputs DI1…DI4 should be connected to XD24:2. The common can be either GND or V_{CC} as DI1…DI4 are of the NPN/PNP type.

DIGND floats

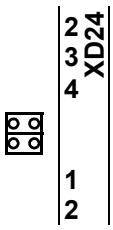

DIGND tied to DIOGND

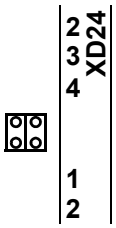

AI1 – Determines whether analog input AI1 is used as a current or voltage input.

Current

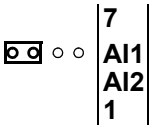

Voltage

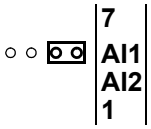

AI2 – Determines whether analog input AI2 is used as a current or voltage input.

Current

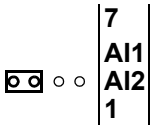

Voltage

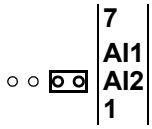

T – Drive-to-drive link termination. Must be set to the ON position when the drive is the last unit on the link.

Termination ON

Termination OFF

External power supply for the JCU Control Unit (XPOW)

External +24 V (minimum 1.6 A) power supply for the control unit can be connected to terminal block XPOW. Using an external supply is recommended if

- the application requires fast start after connecting the drive to the main supply
- fieldbus communication is required when the input power supply is disconnected.

DI5 (XDI:5) as a thermistor input

1…3 PTC sensors can be connected to this input for motor temperature measurement.

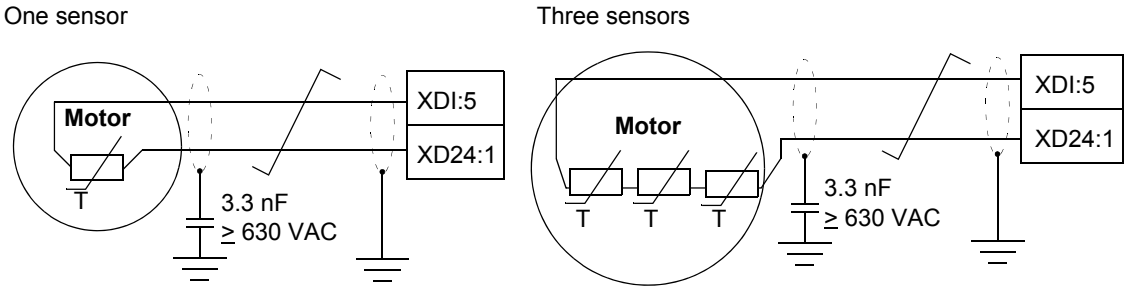

Notes:

- Do not connect both ends of the cable shields directly to ground. If a capacitor cannot be used at one end, leave that end of the shield unconnected.
- The connection of temperature sensors involves parameter adjustment. See the *Firmware manual* of the drive.
- Pt100 sensors are not to be connected to the thermistor input. Instead, an analog input and an analog current output (located either on the JCU or on an I/O extension module) are used as shown below. The analog input must be set to voltage.

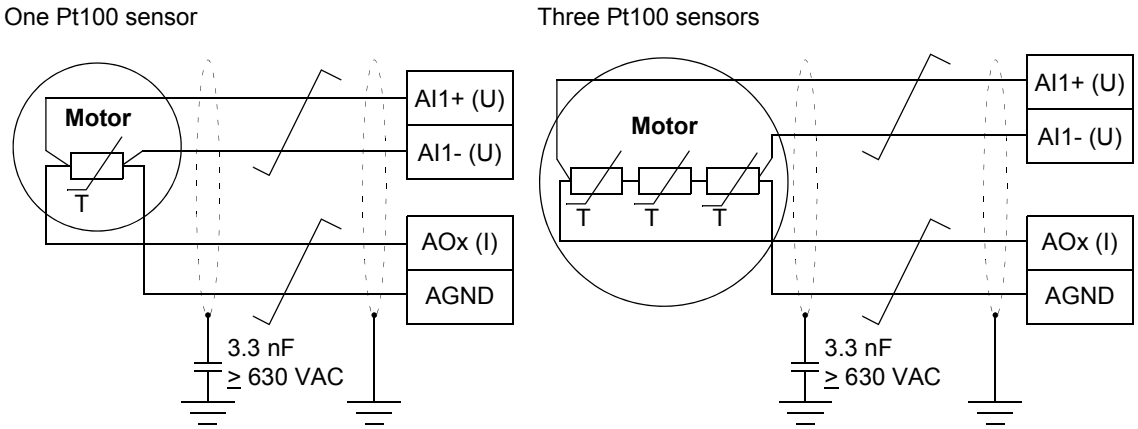

WARNING! As the inputs pictured above are not insulated according to IEC 60664, the connection of the motor temperature sensor requires double or reinforced insulation between motor live parts and the sensor. If the assembly does not fulfil the requirement,

- the I/O board terminals must be protected against contact and must not be connected to other equipment

or

- the temperature sensor must be isolated from the I/O terminals.

Start interlock (XDI:A)

Terminal XDI:A must be jumpered to XD24:3 to enable the drive start.

Drive-to-drive link (XD2D)

The drive-to-drive link is a daisy-chained RS-485 transmission line that allows basic master/follower communication with one master drive and multiple followers.

Termination activation jumper T (see section *Jumpers* above) next to this terminal block must be set to the ON position on the drives at the ends of the drive-to-drive link. On intermediate drives, the jumper must be set to the OFF position.

Shielded twisted-pair cable (~100 ohm, for example PROFIBUS-compatible cable) must be used for the wiring. For best immunity, high quality cable is recommended. The cable should be kept as short as possible; the maximum length of the link is 50 meters (164 ft). Unnecessary loops and running the cable near power cables (such as motor cables) must be avoided. The cable shields must to be grounded to the control cable clamp plate on the drive as shown on page *86*.

The following diagram shows the wiring of the drive-to-drive link.

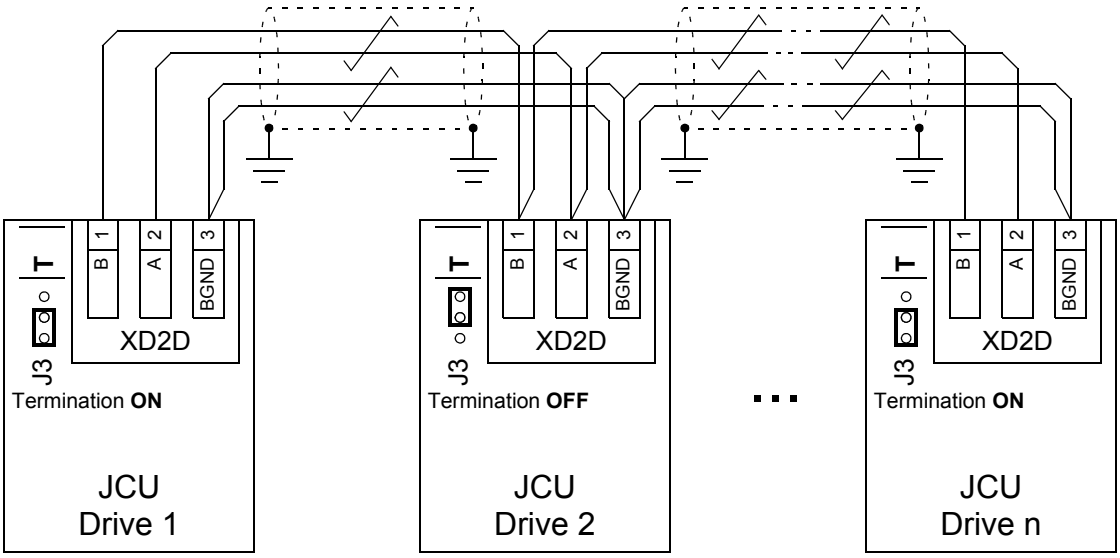

Safe torque off (XSTO)

For the drive to start, both connections (OUT1 to IN1, and OUT2 to IN2) must be closed. By default, the terminal block has jumpers to close the circuit. Remove the jumpers before connecting an external Safe torque off circuitry to the drive. See page *64*.

Control cable connection procedure

See the cable routing on page *86* and connect the control cables as follows:

1. Ground the shields of all control cables connected to the control unit at the clamp plate. The shields should be continuous as close to the terminals of the control unit as possible. Only remove the outer jacket of the cable at the cable clamp so that the clamp presses on the bare shield.
2. Connect the conductors to the appropriate detachable terminals (see page *81)* of the control unit. At the terminal block, use shrink tubing or insulating tape to contain any stray strands. The shield (especially in case of multiple shields) can also be terminated with a lug and fastened with a screw at the clamp plate. Leave the other end of the shield unconnected or ground it indirectly via a few nanofarads high-frequency capacitor eg, 3.3 nF / 630 V. The shield can also be grounded directly at both ends if they are *in the same ground line* with no significant voltage drop between the end points.Tighten the screws to secure the connection.
   Note: Keep any signal wire pairs twisted as close to the terminals as possible. Twisting the wire with its return wire reduces disturbances caused by inductive coupling.

Routing the control cables

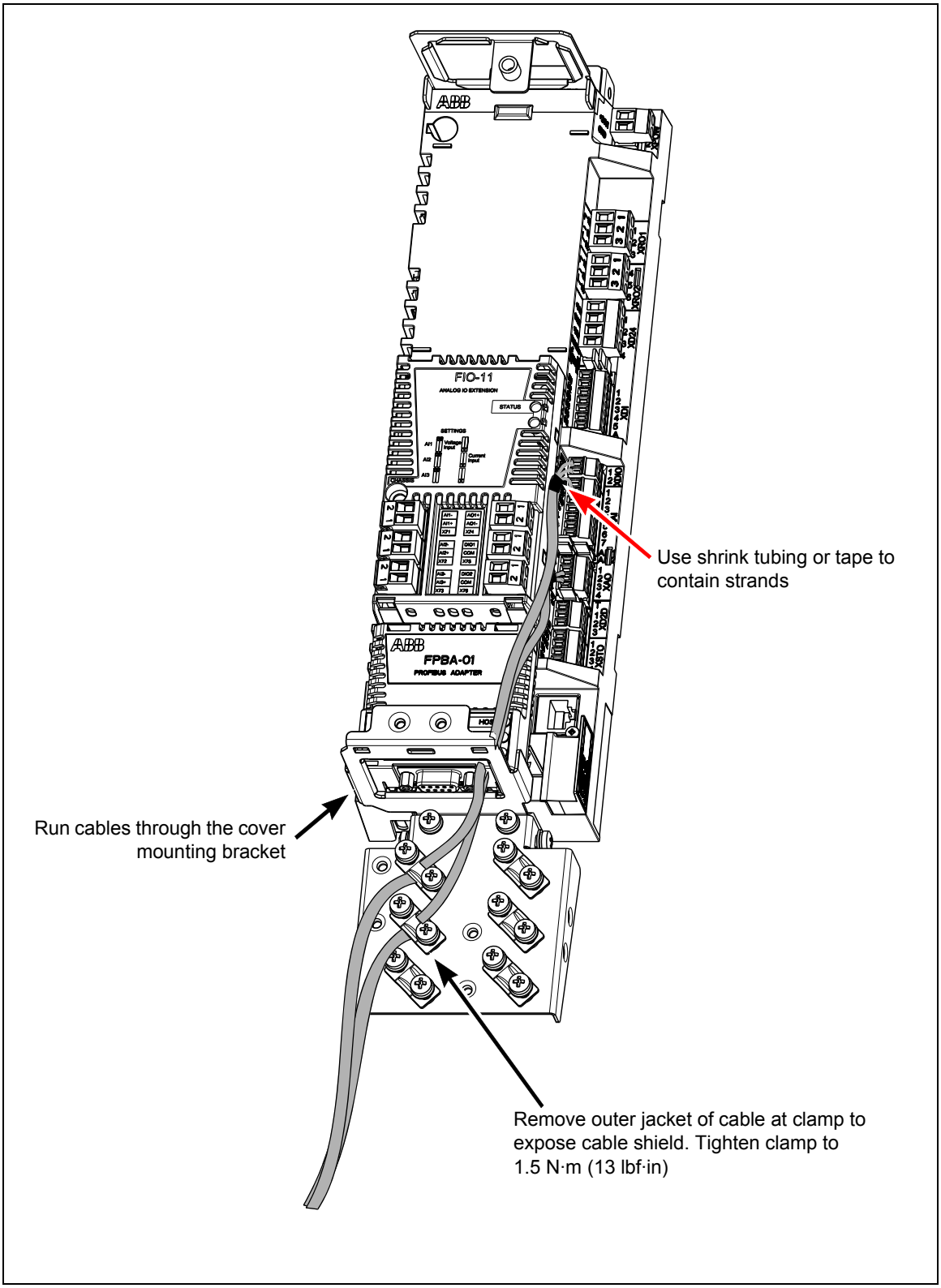

Connecting a PC

Connect the PC to connector X7 on the control unit (see page *24*) or to the connector in the control panel holder (see page *25*).

Installing optional modules

Mechanical installation

Optional modules such as a fieldbus adapters, an I/O extensions and the pulse encoder interfaces are inserted in the optional module slot on the control unit. See page *27* for the available slots.

- Remove the cover assembly (if present) from on the control unit (refer to page *77*).
- Remove the protective cover (if present) from the connector of the slot.
- Insert the module carefully into its position on the control unit.
- Fasten the screw.

Note: Correct installation of the screw is essential for fulfilling the EMC requirements and for proper operation of the module.

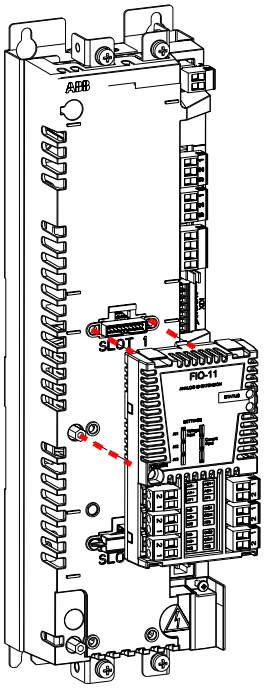

Wiring the modules

See the appropriate optional module manual for specific installation and wiring instructions. See page *86* for routing the cables.

8

Installation checklist

What this chapter contains

This chapter contains a list for checking the mechanical and electrical installation of the drive.

Go through the checklists below together with another person. Follow the *Safety instructions* on the first pages of this manual.

Mechanical installation

Cabinet construction

Checks for cabinet construction are listed below.

1	Cabinet construction
1.1	Frame, wall, floor and roof structures, busbar enclosures and cable entries are correct and completely assembled.
1.2	The drive module is fastened properly to the cabinet. (See *Planning the cabinet installation* and *Mechanical installation.*)
1.3	Mechanical joints are tightened and not broken.
1.4	Parts are clean and painted surfaces not scratched. The cabinet frame and parts which are in metal to metal contact with the frame (for example seams, component fixing points on assembly plates, back of control unit mounting plate) are **not** finished with non-conducting paint or material.
1.5	Degree of protection (IPxx)
1.6	There is a sufficient number of supports, bolts and nuts for cables.

Instrumentation, busbars and cabling

Checks for instrumentation, busbars, cabling, clearances and creepage distances are listed below. For more information, see chapter *Planning the electrical installation*.

2	**Instrumentation**
2.1	Type and number of option modules and other equipment is correct. Option modules and other equipment are not damaged.
2.2	Option modules and terminals are labelled correctly.
2.3	The placement of option modules and other equipment inside the cabinet and on the cabinet door is correct.
2.4	The mounting of option modules and other equipment is correct.
3	**Busbars**
3.1	The types (Al/Cu) and cross-sections of busbars are correct.
3.2	Busbars are intact and joint surfaces are clean. There are no metal scraps on the busbars that could cause a short-circuit.
3.3	The placement and mounting of busbars is correct.
3.4	**The electrical connection of busbars.** Check that the surfaces in electrical connections of aluminium and uncoated busbars are rubbed. Check that anti-oxidant joint compound is used in electrical connections of aluminium busbars. Check that the number of washers and the sizes of bolts are correct.
3.5	Busbar supports and lead-in insulators are visually intact and degreased, and placed and mounted correctly.
3.6	The electrical connections on the main circuit are tightened to required torque and marked with a green marking.
4	**Cabling and wiring**
4.1	Wiring of the main circuit. Check • AC supply input • AC output
4.2	Wiring of the drive module control circuit. Check • JCU Control Unit connections • control cable connections • control panel cable connections.
4.3	Cable types, cross-sections, colors and optional markings are correct.
4.4	Check the cabling for circuits susceptible to interference. Check the twisting of cables and cable routes.
4.5	Check that cables without short-circuit protection • can carry the load current • are shorter than 3 m (10 ft) • are assembled separate to other cables • are protected by an enclosure or duct.
4.6	Connection of cables to devices and terminal blocks. Check that • cables are connected to terminals tight enough by pulling the cable • cable termination on terminals chaining is done correctly • bare conductors are not too far outside the terminal causing an insufficient clearance or loss of shielding against contact.
4.7	Cables are not lying against sharp edges or bare live parts. Bending radius of fiber optic cables at least 3.5 cm (1.38 in.).
4.8	The type, markings, insulation plates and cross connections of terminal blocks are correct.

Groundings and protection

Checks for groundings and protections are listed below. Tips for installations where EMC emissions must be minimized are given in column Extra requirements for EMC.

6	Groundings and protection	Extra requirements for EMC
6.1	The grounding colors, cross-section and grounding points of modules and other equipment match the circuit diagrams.	No long routes for pigtails
6.2	Connections of PE cables and busbars are tight enough. Pull the cable to test that it does not loosen.	No long routes for pigtails
6.3	Doors equipped with electrical equipment are grounded.	No long grounding routes. From EMC standpoint best result is achieved with a flat copper braid.
6.4	Fans that can be touched are shrouded.	
6.5	Live parts inside the doors are protected against direct contact to at least IP2x (if required).	

Labels, switches, fuses and doors

Checks for labels, switches, fuses and doors are listed below.

7	Labels
7.1	The type designation labels and warning and instruction stickers are made according to the local regulations and placed correctly.
8.	**Switches and doors**
8.1	Check the functioning of mechanical switches, main dicsonnecting switch and cabinet doors.

Electrical installation

Checks for electrical installation are listed below. See chapters *Planning the electrical installation* and *Electrical installation.*

	Check
☐	The capacitors are reformed if stored over one year (ask local ABB representative for more information).
☐	The drive is grounded properly: 1) proper and properly tightenened PE connector, 2) proper galvanic connection between drive frame and cabinet (fastening points are unpainted).
☐	The supply (input power) voltage matches the drive nominal input voltage.
☐	The supply (input power) is connected to U1/V1/W1 and the terminals are tightened to specified torque.
☐	Appropriate supply (input power) fuses and disconnector are installed.
☐	The motor is connected to U2/V2/W2, and the terminals are tightened to specified torque.
☐	The motor cable is routed away from other cables.
☐	There are no power factor compensation capacitors in the motor cable.
☐	The external control connections to the JCU Control Unit are OK.
☐	There are no tools, foreign objects or dust from drilling inside the drive.

	Check
☐	The supply (input power) voltage cannot be applied to the output of the drive through a bypass connection.
☐	Motor connection box and other covers are in place.

Cooling and driven equipment

Checks for cooling conditions and motor and driven equipment before start-up are listed below.

☐	The ambient operating conditions are allowable. (See *Losses, cooling data and noise* (page *112*), *Ambient conditions* (page *116*.)
☐	The cooling air will flow freely. The protective covering is removed from the top of the drive module.
☐	The motor and the driven equipment are ready for start. (See *Planning the electrical installation, Motor connection data* (page *113*).

9

Start-up

What this chapter contains

This chapter describes the start-up procedure of the drive.

Start-up procedure

Set-up of the drive program according to the start-up instructions given in the *Quick start-up guide* or *Firmware manual*.

Perform the start-up tasks instructed by the cabinet-installer of the drive module.

10

Fault tracing

What this chapter contains

This chapter describes the fault tracing possibilities of the drive.

LEDs

This table describes LEDs of the drive module.

Where	LED	When the LED is lit
JINT board	V204 (green)	+5 V voltage of the board is OK.
	V309 (red)	Not in use.
	V310 (green)	IGBT control signal transmission to the gate driver control boards is enabled.

Warning and fault messages

See the *Firmware manual* for the descriptions, causes and remedies of the control program warning and fault messages.

11

Maintenance

What this chapter contains

This chapter contains preventive maintenance instructions.

Maintenance intervals

If installed in an appropriate environment, the drive requires very little maintenance. This table lists the routine maintenance intervals recommended by ABB.

Interval	Maintenance	Instruction
Every year when stored	Capacitor reforming	See *Reforming the capacitors*.
Every 6 to 12 months (depending on the dustiness of the environment)	Checking the cleanliness of the cabinet and the surroundings	See *Cabinet, Heatsink*.
Every 3 years	Checking the condition of fiber optic cables	See the fault logger. If PPCC LINK faults have recurred, change the fiber optic cables.
Every 3 years if the ambient temperature is higher than 40 °C (104 °F). Otherwise, **every 6 years**.	Cooling fan change	See *Fan*.
Every 6 years if the ambient temperature is higher than 40 °C (104 °F) or if the drive is subjected to cyclic heavy load or continuous nominal load. Otherwise, **every 9 years**.	Capacitor change	See *Capacitors*.
Every 9 years	JINT board and flat cable change	Contact ABB.

Every 10 years	Control panel battery replacement.	The battery is housed on the rear of the control panel. Replace with a new CR 2032 battery.

Consult your local ABB Service representative for more details on the maintenance. On the Internet, go to http://www.abb.com/drives and select *Drive Services – Maintenance and Field Services*.

Cabinet

When necessary, clean the interior of the cabinet with a soft brush and a vacuum cleaner.

Heatsink

The module heatsink fins pick up dust from the cooling air. The drive runs into overtemperature warnings and faults if the heatsink is not clean. When necessary, contact ABB for cleaning of the heatsink.

Fan

The lifespan of the cooling fan of the drive module is about 50 000 hours. The actual lifespan depends on the running time of the fan, ambient temperature and dust concentration. See the *Firmware manual* for the actual signal which indicates the running time of the cooling fan. For resetting the running time signal after a fan replacement, please contact ABB.

Replacement fans are available from ABB. Do not use other than ABB specified spare parts.

Replacing the cooling fan of the module

WARNING! Follow the safety instructions, page *12*. Ignoring the instructions can cause physical injury or death, or damage to the equipment.

1. Remove the front cover.
2. Disconnect the fan capacitor and power supply wires.
3. Undo the red fastening screws of the plastic side cover of the fan. Shift the cover to the right to free its right-hand edge and lift the cover off.
4. Undo the red fastening screws of the fan.
5. Lift the fan out of the cabinet.
6. Install the new fan and fan capacitor in reverse order to the above.

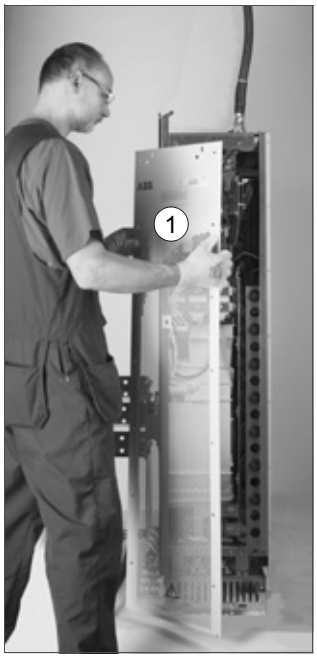

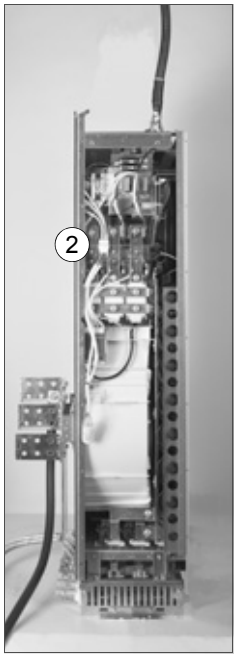

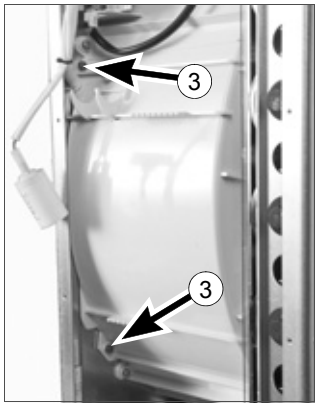

M5×8, 2 N·m (1.5 lbf·ft)

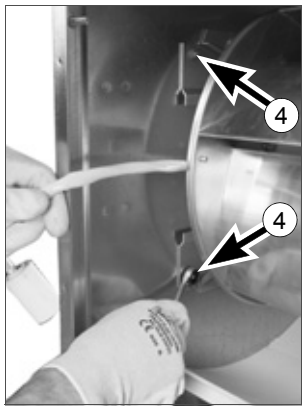

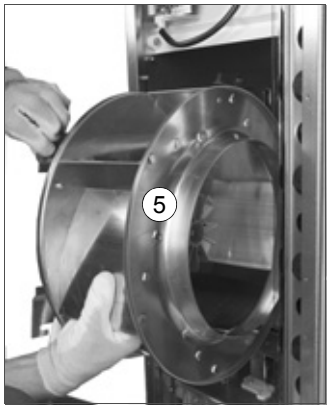

M6, 8 N·m (6 lbf·ft)

Replacing the drive module

The drive module can be replaced by disconnecting the pedestal and busbars connected to it from the drive module and leaving the pedestal and busbars into the cabinet. Proceed as follows:

WARNING! Follow the safety instructions, page 12. Ignoring the instructions can cause physical injury or death, or damage to the equipment.

1. Disconnect the input power cable from the module.
2. Disconnect the power supply cable and the fibre optic cables from the JCU Control Unit and coil them on the top of the drive module.
3. Undo the upper fastening screws of the module (if used).
4. Undo the screws (2 pcs) that fasten the outer support bracket to the drive module.
5. Remove the front cover, see page 99.
6. Undo the pedestal fastening screws.
7. Undo the screws that fasten the internal busbars of the pedestal to the drive module busbars.
8. Secure the module from the lifting hooks at the top.
9. Pull the module from the cabinet onto a pallet truck.
10. Install the new module in reverse order to the above.

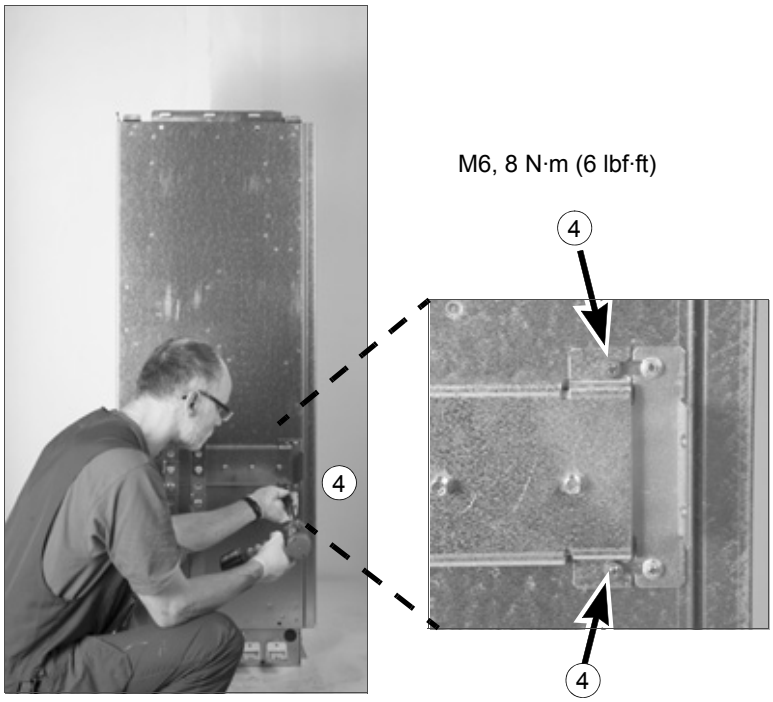

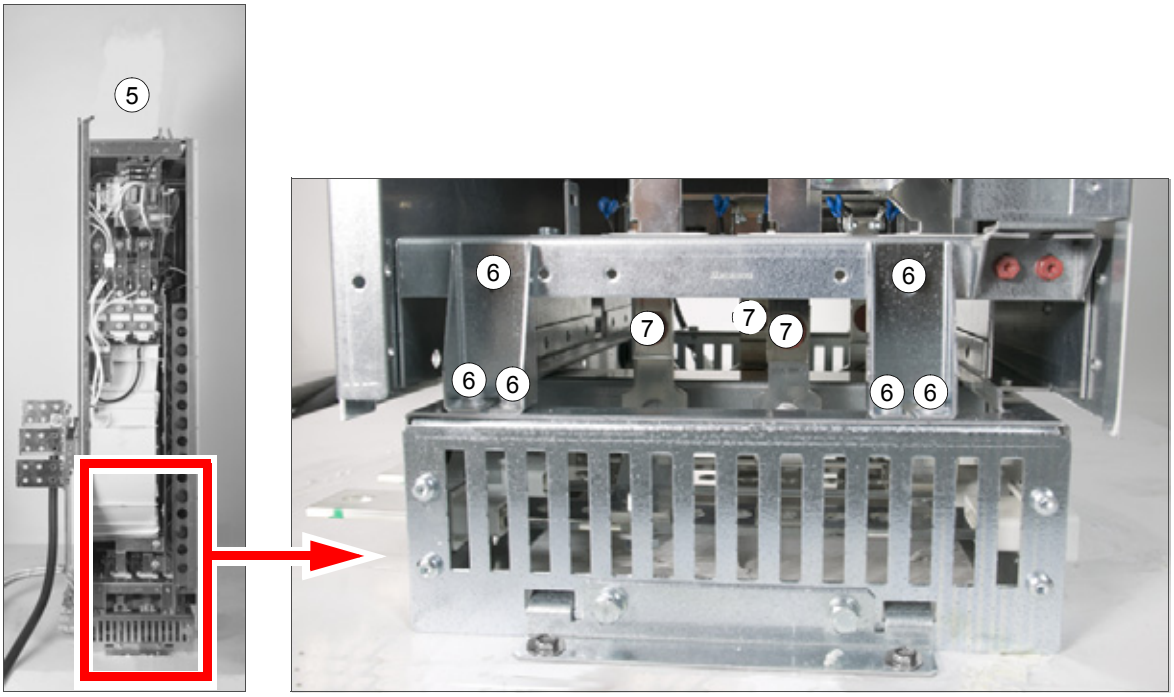

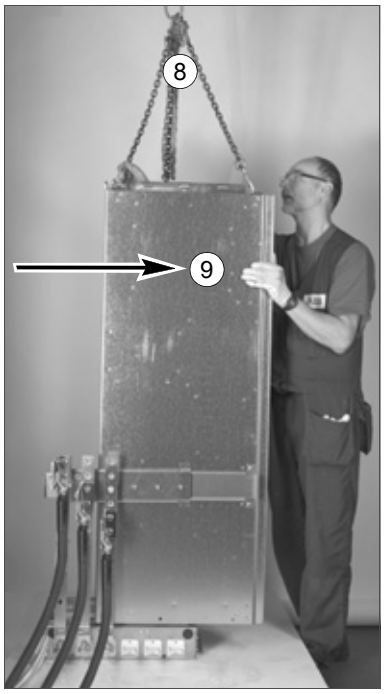

6 M6×16 combi, 8 N·m (6 lbf·ft)

7 M10×25 combi, 30 N·m (22 lbf·ft)

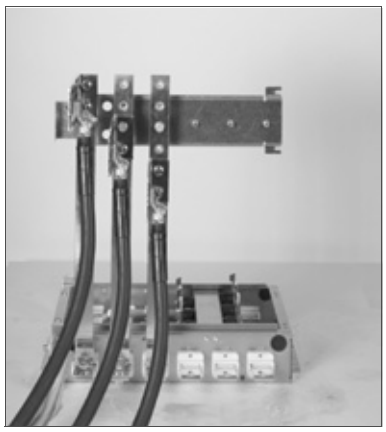

Pedestal when the module is removed

Note: A drive module trolley is available from ABB. The trolley helps in removing heavy drive modules from a cabinet and in replacing the module.

Capacitors

The drive intermediate circuit employs several electrolytic capacitors. Their lifespan is at least 90 000 hours depending on the operating time of the drive, loading and ambient temperature. Capacitor life can be prolonged by lowering the ambient temperature.

It is not possible to predict a capacitor failure. Capacitor failure is usually followed by damage to the unit and an input cable fuse failure, or a fault trip. Contact ABB if capacitor failure is suspected. Replacements are available from ABB. Do not use other than ABB specified spare parts.

Reforming the capacitors

The capacitors must be reformed if the drive has been stored for a year or more. See page 28 for information on finding out the manufacturing date. For information on reforming the capacitors, contact your local ABB representative.

Replacing the capacitor pack

WARNING! Follow the safety instructions, page *12*. Ignoring the instructions can cause physical injury or death, or damage to the equipment.

1. Remove the front cover, see (1) on page *99*. Remove the profiled side plate.
2. Disconnect the discharging resistor wires. The upper ones are connected with the same nut as the busbar.
3. Undo the fastening screws (detail photos A, B, C, D).
4. Lift the capacitor pack out.
5. Install the new capacitor pack in reverse order to the above.

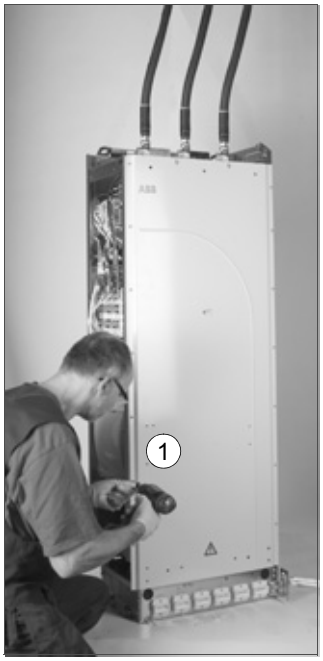

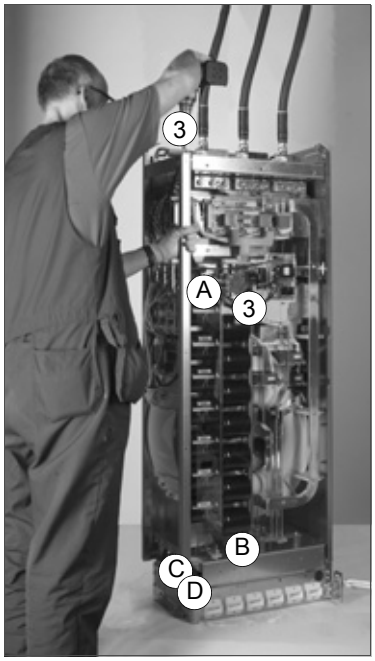

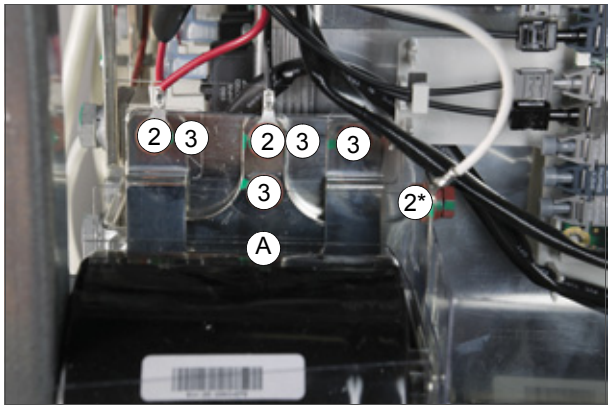

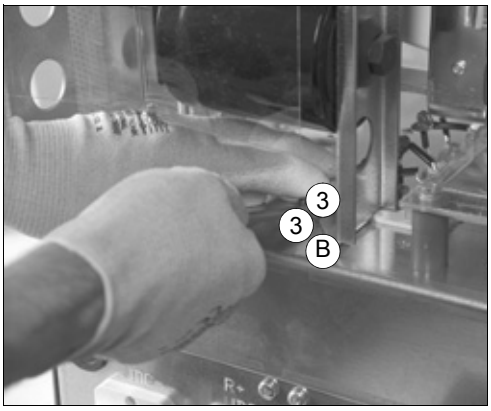

(3) M6, 8 N·m (6 lbf·ft) (2*) M6, **5** N·m (**4** lbf·ft)

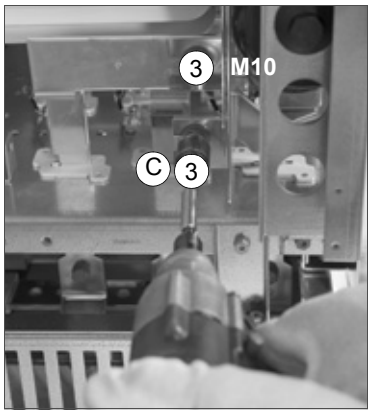

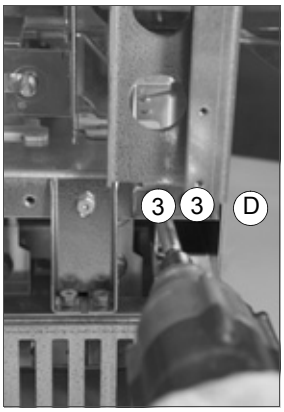

M6×12 combi screw

M6×12 combi, 8 N·m (6 lbf·ft)
M10, 30 N·m (22 lbf·ft)

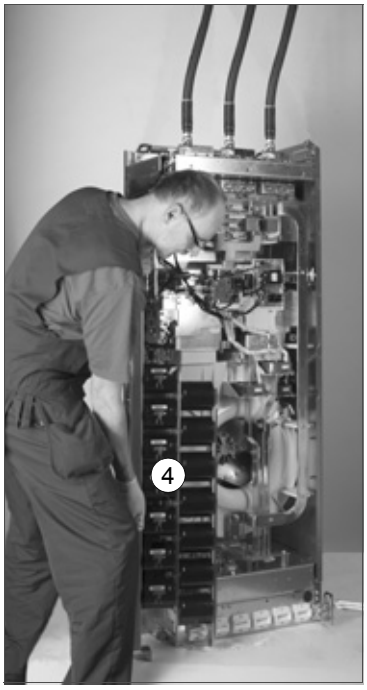

Capacitor pack removed

Memory unit

When a drive module is replaced, the parameter settings can be retained by transferring the memory unit from the defective drive module to the new module. The memory unit is located in the JCU Control Unit, see page *24*.

WARNING! Do not remove or insert a memory unit when the drive module is powered.

After power-up, the drive will scan the memory unit. If different parameter settings are detected, they are copied to the drive. This may take a few moments.

12

Technical data

What this chapter contains

This chapter contains the technical specifications of the drive, for example, the ratings, sizes and technical requirements, provisions for fulfilling the requirements for CE and other markings.

Ratings

The nominal ratings for the drive modules with 400 V (50 Hz and 60 Hz) supply are given below. The symbols are described below the table.

Drive type	Frame size	Input ratings	Output ratings						
			Nominal			IEC M2/M3		UL NEMA	
		I_{1N}	I_{2N}	I_{cont}	I_{max}	I	P	I	P
		A	A	A	A	A	kW	A	hp
ACQ810-302A-4	G	297	302	340	480	-	-	302	250
ACQ810-361A-4	G	355	361	400	568	-	-	361	300
ACQ810-414A-4	G	407	414	430	588	354	200	414	350
ACQ810-477A-4	G	459	477	521	588	448	250	477	400
ACQ810-550A-4	G	531	550	602	840	550	315	515	450
ACQ810-616A-4	G	599	616	693	1017	616	355	590	500
ACQ810-704A-4	G	689	704	720	1017	700	400	704	600

00581898

I_{1N}	Nominal input current (rms)
I_{2N}	Nominal output current. 110% overload is allowed for 1 minute every 5 minutes.
I_{cont}	Continuous rms output currents with no overload capability
I_{max}	Maximum output current. Available for 10 seconds at start, otherwise as long as allowed by drive temperature.
P	Typical motor power

Note 1: The ratings apply at an ambient temperature of 40 °C (104 °F).

Note 2: To achieve the rated motor power given in the table, the rated current of the drive must be higher than or equal to the rated motor current.

The DriveSize dimensioning tool available from ABB is recommended for selecting the drive, motor and gear combination.

Derating

Ambient temperature derating

In the temperature range +40…50 °C (+104…122 °F), the rated output current is derated by 1% for every added 1 °C (1.8 °F). The output current is calculated by multiplying the current given in the rating table by the derating factor:

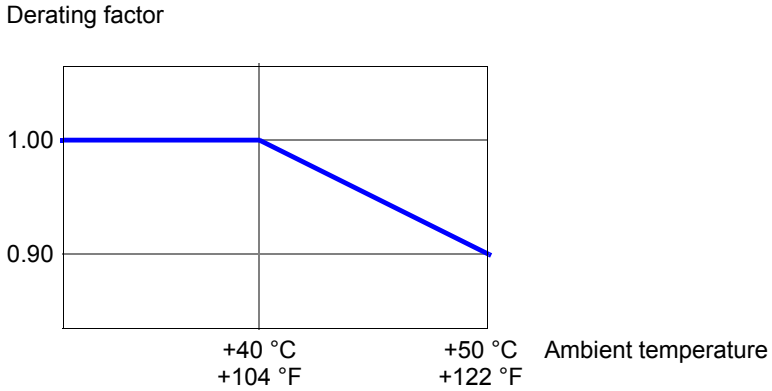

Drive type	Continuous rms output current I_{cont} (A)	
	T = 45 °C	T = 50 °C
ACQ810-302A-4	323	306
ACQ810-361A-4	380	360
ACQ810-414A-4	409	387
ACQ810-477A-4	495	469
ACQ810-550A-4	572	542
ACQ810-616A-4	658	624
ACQ810-704A-4	684	648

00581898

Altitude derating

At altitudes from 1000 to 4000 m (3300 to 13123 ft) above sea level, the continuous output currents given above must be derated 1% for every 100 m (328 ft). For a more accurate derating, use the DriveSize PC tool.

Fuses (IEC)

gG and aR fuses for protection against short-circuit in the input power cable or drive are listed below. Either fuse type may be used if it operates rapidly enough. Choose between gG and aR fuses according to the table under *Quick guide for selecting between gG and aR fuses* on page *110,* or verify the operating time by **checking that the short-circuit current of the installation is at least the value given in the fuse table**. The short-circuit current can be calculated as follows:

$$I_{k2\text{-}ph} = \frac{U}{2 \cdot \sqrt{R_c^2 + (Z_k + X_c)^2}}$$

where

$I_{k2\text{-}ph}$ = short-circuit current in symmetrical two-phase short-circuit (A)

U = network line-to-line voltage (V)

R_c = cable resistance (ohm)

$Z_k = z_k \cdot U_N^2/S_N$ = transformer impedance (ohm)

z_k = transformer impedance (%)

U_N = transformer rated voltage (V)

S_N = nominal apparent power of the transformer (kVA)

X_c = cable reactance (ohm).

Calculation example

Drive:

- ACQ810-04-414A-4
- supply voltage U = 410 V

Transformer:

- rated power S_N = 3000 kVA
- rated voltage U_N = 430 V
- transformer impedance z_k = 7.2%.

Supply cable:

- length = 170 m
- resistance/length = 0.112 ohm/km
- reactance/length = 0.0273 ohm/km.

$$Z_k = z_k \cdot \frac{U_N^2}{S_N} = 0.072 \cdot \frac{(430\ \text{V})^2}{3000\ \text{kVA}} = 4.438\ \text{mohm}$$

$$R_c = 170\ \text{m} \cdot 0.112\ \frac{\text{ohm}}{\text{km}} = 19.04\ \text{mohm}$$

$$X_c = 170\ \text{m} \cdot 0.0273\ \frac{\text{ohm}}{\text{km}} = 4.641\ \text{mohm}$$

$$I_{k2\text{-}ph} = \frac{410\ \text{V}}{2 \cdot \sqrt{(19.04\ \text{mohm})^2 + (4.438\ \text{mohm} + 4.641\ \text{mohm})^2}} = 9.7\ \text{kA}$$

The calculated short-circuit current 9.7 kA is higher than the minimum short-circuit current of the drive gG fuse type OFAF3H500 (8280 A). -> The 500 V gG fuse (ABB Control OFAF3H500) can be used.

Fuse tables

gG fuses								
Drive type ACq810-04…	**Input current**	**Min. short-circuit current [1]**	**Fuse**					
	A	A	A	A^2s	V	Manufacturer	Type	IEC size
-302A-4	297	8280	500	2 900 000	500	ABB Control	OFAF3H500	3
-361A-4	355	8280	500	2 900 000	500	ABB Control	OFAF3H500	3
-414A-4	407	8280	500	2 900 000	500	ABB Control	OFAF3H500	3
-477A-4	459	10200	630	4 000 000	500	ABB Control	OFAF3H630	3
-550A-4	531	10200	630	4 000 000	500	ABB Control	OFAF3H630	3
-616A-4	599	13500	800	7 400 000	500	ABB Control	OFAF3H800	3
-704A-4	689	13500	800	7 400 000	500	ABB Control	OFAF3H800	3

[1] minimum short-circuit current of the installation

Note 1: See also *Implementing thermal overload and short-circuit protection* on page *62*. For UL recognized fuses, see *Fuses (UL)* on page *110*.

Note 2: In multicable installations, install only one fuse per phase (not one fuse per conductor).

Note 3: Larger fuses than the recommended ones must not be used.

Note 4: Fuses from other manufacturers can be used if they meet the ratings and the melting curve of the fuse does not exceed the melting curve of the fuse mentioned in the table.

00581898, 00581898

Ultrarapid (aR) fuses								
Drive type ACS800-04…	**Input current**	**Min. short-circuit current [1]**	**Fuse**					
	A	A	A	A^2s	V	Manufacturer	Type DIN 43620	Size
-302A-4	297	4000	800	465 000	690	Bussmann	170M6812	DIN2*
-361A-4	355	4000	800	465 000	690	Bussmann	170M6812	DIN2*
-414A-4	407	4000	800	465 000	690	Bussmann	170M6812	DIN2*
-477A-4	459	7800	1250	1 950 000	690	Bussmann	170M8554	DIN3
-550A-4	531	7800	1250	1 950 000	690	Bussmann	170M8554	DIN3
-616A-4	599	8850	1400	3 900 000	690	Bussmann	170M8555	DIN3
-704A-4	689	8850	1400	3 900 000	690	Bussmann	170M8555	DIN3

[1] minimum short-circuit current of the installation

Note 1: See also *Implementing thermal overload and short-circuit protection* on page *62*. For UL recognized fuses, see *Fuses (UL)* on page *110*.

Note 2: In multicable installations, install only one fuse per phase (not one fuse per conductor).

Note 3: Larger fuses than the recommended ones must not be used.

Note 4: Fuses from other manufacturers can be used if they meet the ratings and the melting curve of the fuse does not exceed the melting curve of the fuse mentioned in the table.

00581898, 00581898

Quick guide for selecting between gG and aR fuses

The table below is a short cut in selecting between gG and aR fuses. The combinations (cable size, cable length, transformer size and fuse type) in the table fulfill the minimum requirements for the proper operation of the fuse.

Drive type ACQ810-04…	Cable type		Supply transformer minimum apparent power S_N (kVA)					
	Copper	Aluminum	Maximum cable length with gG fuses			Maximum cable length with aR fuses		
			10 m	50 m	100 m	10 m	100 m	200 m
-302A-4	2 × (3x120) Cu	3 × (3x95) Al	530	570	670	370	370	370
-361A-4	2 × (3x120) Cu	3 × (3x95) Al	530	570	670	370	370	370
-414A-4	2 × (3x120) Cu	3 × (3x95) Al	530	570	670	370	370	370
-477A-4	3 × (3x95) Cu	3 × (3x150) Al	660	720	840	500	570	760
-550A-4	3 × (3x120) Cu	3 × (3x185) Al	660	720	840	520	570	760
-616A-4	2 × (3x240) Cu	3 × (3x240) Al	880	980	1200	580	670	880
-704A-4	3 × (3x150) Cu	3 × (3x240) Al	880	980	1200	610	670	880

Note 1: The supply transformer minimum power in kVA is calculated with a z_k value of 6% and frequency 50 Hz.

Note 2: The table is not intended for transformer selection - that must be done separately.

00556489 A

The following parameters can affect the correct operation of the protection:

- cable length ie, the longer the cable the weaker the fuse protection, as the long cable limits the fault current
- cable size ie, the smaller the cable cross-section the weaker the fuse protection, as the small cable size limits the fault current
- transformer size ie, the smaller the transformer the weaker the fuse protection, as the small transformer limits the fault current
- transformer impedance ie, the higher the z_k the weaker the fuse protection as high impedance limits the fault current.

The protection can be improved by installing a larger supply transformer and/or bigger cables, and in most cases by selecting aR fuses instead of gG fuses. Selection of smaller fuses improves the protection, but may also affect the fuse life time and lead to unnecessary operation of the fuses.

In case of any uncertainty regarding the drive protection, please contact your local ABB representative.

Fuses (UL)

UL class T or L fuses for branch circuit protection per NEC are listed below. Fast acting class T or faster fuses are recommended in the USA.

Check from the fuse time-current curve that the operating time of the fuse is below 0.1 seconds. The operating time depends on the supply network impedance and the cross-sectional area and length of the supply cable. The short-circuit current can be calculated as shown on page *107*.

UL class T and L fuses

Drive type ACS850-04…	Input current	Fuse				
	A	A	V	Manufacturer	Type	UL class
-302A-4	297	500	600	Bussmann	JJS-500	T
-361A-4	355	500	600	Bussmann	JJS-500	T
-414A-4	407	500	600	Bussmann	JJS-500	T
-477A-4	459	600	600	Bussmann	JJS-600	T
-550A-4	531	800	600	Ferraz	A4BY800	L
-616A-4	599	800	600	Ferraz	A4BY800	L
-704A-4	689	800	600	Ferraz	A4BY800	L

Note 1: See also *Implementing thermal overload and short-circuit protection* on page *62*.

Note 2: In multicable installations, install only one fuse per phase (not one fuse per conductor).

Note 3: Larger fuses than the recommended ones must not be used.

Note 4: Fuses from other manufacturers can be used if they meet the ratings and the melting curve of the fuse does not exceed the melting curve of the fuse mentioned in the table.

00581898

Dimensions, weights and free space requirements

IP00					UL type open				
Height mm	W1 mm	W2 mm	Depth* mm	Weight kg	Height in.	W1 in.	W2 in.	Depth* in.	Weight lb
1564	415	562	571	200	61.57	16.35	22.14	22.48	441

W1 width of the basic unit with PE terminal

W2 width with the cable connection terminal plates

* Depth without fastening brackets is 568 mm (22.36 in.).

Note 1. For more information on dimensions, see chapter *Dimension drawings*.

Note 2. Different pedestal (flat type) and busbar sets are available. See page *25*.

Note 3. For free space requirements around the drive module, see page *39*.

Losses, cooling data and noise

Drive type	Frame size	Air flow		Heat dissipation	Noise
		m^3/h	ft^3/min	W	dB
ACQ810-302A-4	R8	1220	718	5000	72
ACQ810-361A-4	R8	1220	718	6000	72
ACQ810-414A-4	R8	1220	718	6850	72
ACQ810-477A-4	R8	1220	718	7800	72
ACQ810-550A-4	R8	1220	718	8100	72
ACQ810-616A-4	R8	1220	718	9100	72
ACQ810-704A-4	R8	1220	718	9700	72

00581898

IP22 cabinet with no extra fan

An IP22 cabinet should meet the following data to ensure efficient cooling of the drive module. No extra fan is used. The pressure drop over the cabinet is the additional counterpressure that the module fan is capable of overcoming while still maintaining the required air flow through the module.

Temperature rise over module	30 °C
Pressure drop	300 Pa (over module), 45 Pa over cabinet
Cabinet air inlet	Minimum size (mm): 288×292+688×521
	Filter by Luftfilter: airTex G150
Cabinet air outlet size	398 mm × 312 mm (2 pcs) when the outlet is located on the cabinet roof

00096931

IP54 cabinet with an extra fan

An IP54 cabinet should meet the following data to ensure efficient cooling of the drive module. An extra fan is used. The pressure drop over the cabinet is the counterpressure the extra fan must overcome. The given fan types and filter materials are examples. Corresponding products by another manufacturer may be used as well. See the manufacturer's Internet site for the detailed specification.

Temperature rise over module	30 °C
Pressure drop	250 Pa (over cabinet), average, air filters moderately congested
Extra fan type	RH35M-4EK.2F.1R by Ziehl-Abegg or RB4T-355/170 by ebm
Air inlet filter by Luftfilter	airComp 300-50,
	Minimum size in door (mm): 288×292 + 688×521
Air outlet filter by Luftfilter	airTex G150
	Minimum size at roof (mm): 398×312 (2 pcs)

00096931

Terminal and lead-through data for the power cables

Input, motor and DC cable terminal sizes (per phase), maximum accepted cable and tightening torques are given below.

U1, V1, W1, U2, V2, W2, UDC+, UDC-				Grounding PE	
Number of holes per phase	**Max. cable** mm^2	**Screw**	**Tightening torque** N·m	**Screw**	**Tightening torque** N·m
3	3×240	M12	50...75	M10	30...44

Max. cable	U1, V1, W1, U2, V2, W2, UDC+, UDC-		Grounding PE	
kcmil/AWG	**Screw**	**Tightening torque** lbf·ft	**Screw**	**Tightening torque** lbf·ft
3 × 700 MCM	1/2	37...55	3/8	22...32

Two-hole 1/2 inch diameter cable lugs can be used.

Terminal data for the control cables

See page *81*.

Electrical power network specification

Voltage (U_1)	380 … 480 V AC 3-phase ± 10%
Rated conditional short-circuit current (IEC 60439-1)	65 kA when protected by fuses given in the fuse tables
Short-circuit current protection (UL 508C, CSA C22.2 No. 14-05)	US and Canada: The drive is suitable for use on a circuit capable of delivering not more than 100 kA symmetrical amperes (rms) at 500 V maximum when protected by fuses given in table *UL class T and L fuses*.
Frequency	48 to 63 Hz, maximum rate of change 17%/s
Imbalance	Max. ± 3% of nominal phase to phase input voltage
Fundamental power factor (cos phi$_1$)	0.98 (at nominal load)

Motor connection data

Motor types	Asynchronous AC induction motors
Voltage (U_2)	0 to U_1, 3-phase symmetrical, U_{max} at the field weakening point
Frequency	0…500 Hz
Current	See section *Ratings.*
Switching frequency	3 kHz (typically)
Maximum recommended motor cable length	300 m (984 ft). **Note:** With motor cables longer than 100 m (328 ft) the EMC Directive requirements may not be fulfilled.

Control unit (JCU-21) connection data

Power supply	24 V (±10%) DC, 1.6 A Supplied from the power unit of the drive, or from an external power supply through connector XPOW (pitch 5 mm, wire size 2.5 mm^2).
Relay outputs RO1…RO2 (XRO1 … XRO2)	Connector pitch 5 mm, wire size 2.5 mm^2 250 V AC / 30 V DC, 2 A Protected by varistors **Note:** At installation sites between 2000 meters (6562 feet) and 4000 meters (13123 feet), the Protective Extra Low Voltage (PELV) requirements are not fulfilled if a relay output is used with a voltage greater than 48 V.
+24 V output (XD24)	Connector pitch 5 mm, wire size 2.5 mm^2
Digital inputs DI1…DI5 (XDI:1 … XDI:5)	Connector pitch 3.5 mm, wire size 1.5 mm^2 24 V logic levels: “0” < 5 V, “1” > 15 V R_{in}: 2.0 kohm Input type: NPN/PNP (DI1…DI4), NPN (DI5) Filtering: 0.25 ms DI5 (XDI:5) can alternatively be used as an input for 1…3 PTC thermistors. “0” > 4 kohm, “1” < 1.5 kohm I_{max}: 15 mA
Start interlock input DIIL (XDI:A)	Wire size 1.5 mm^2 24 V logic levels: “0” < 5 V, “1” > 15 V R_{in}: 2.0 kohm Input type: NPN/PNP Filtering: 0.25 ms
Digital inputs/outputs DIO1 and DIO2 (XDIO:1 and XDIO:2) Input/output mode selection by parameters. DIO1 can be configured as a frequency input (0…16 kHz) for 24 V level square wave signal (sinusoidal or other wave form cannot be used). DIO2 can be configured as a 24 V level square wave frequency output. See *Firmware manual,* parameter group 12.	Connector pitch 3.5 mm, wire size 1.5 mm^2 As inputs: 24 V logic levels: “0” < 5 V, “1” > 15 V R_{in}: 2.0 kohm Filtering: 0.25 ms As outputs: Total output current limited by auxiliary voltage outputs to 200 mA Output type: Open emitter 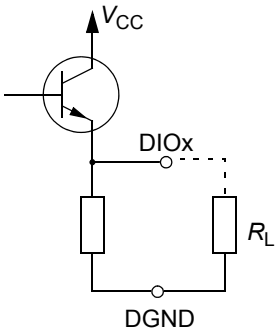
Reference voltage for analog inputs +VREF and -VREF (XAI:1 and XAI:2)	Connector pitch 3.5 mm, wire size 1.5 mm^2 10 V ±1% and –10 V ±1%, R_{load} > 1 kohm
Analog inputs AI1 and AI2 (XAI:4 … XAI:7). Current/voltage input mode selection by jumpers. See page *82*.	Connector pitch 3.5 mm, wire size 1.5 mm^2 Current input: –20…20 mA, $R_{in:}$ 100 ohm Voltage input: –10…10 V, R_{in}: 200 kohm Differential inputs, common mode ±20 V Sampling interval per channel: 0.25 ms Filtering: 0.25 ms Resolution: 11 bit + sign bit Inaccuracy: 1% of full scale range

Analog outputs AO1 and AO2 (XAO)	Connector pitch 3.5 mm, wire size 1.5 mm^2 0…20 mA, R_{load} < 500 ohm Frequency range: 0…800 Hz Resolution: 11 bit + sign bit Inaccuracy: 2% of full scale range
Drive to drive link (XD2D)	Connector pitch 3.5 mm, wire size 1.5 mm^2 Physical layer: RS-485 Termination by jumper
Safe torque off connection (XSTO)	Connector pitch 3.5 mm, wire size 1.5 mm^2 For the drive to start, both connections (OUT1 to IN1, and OUT2 to IN2) must be closed
Control panel / PC connection	Connector: RJ-45 Cable length < 3 m
Isolation and grounding diagram	

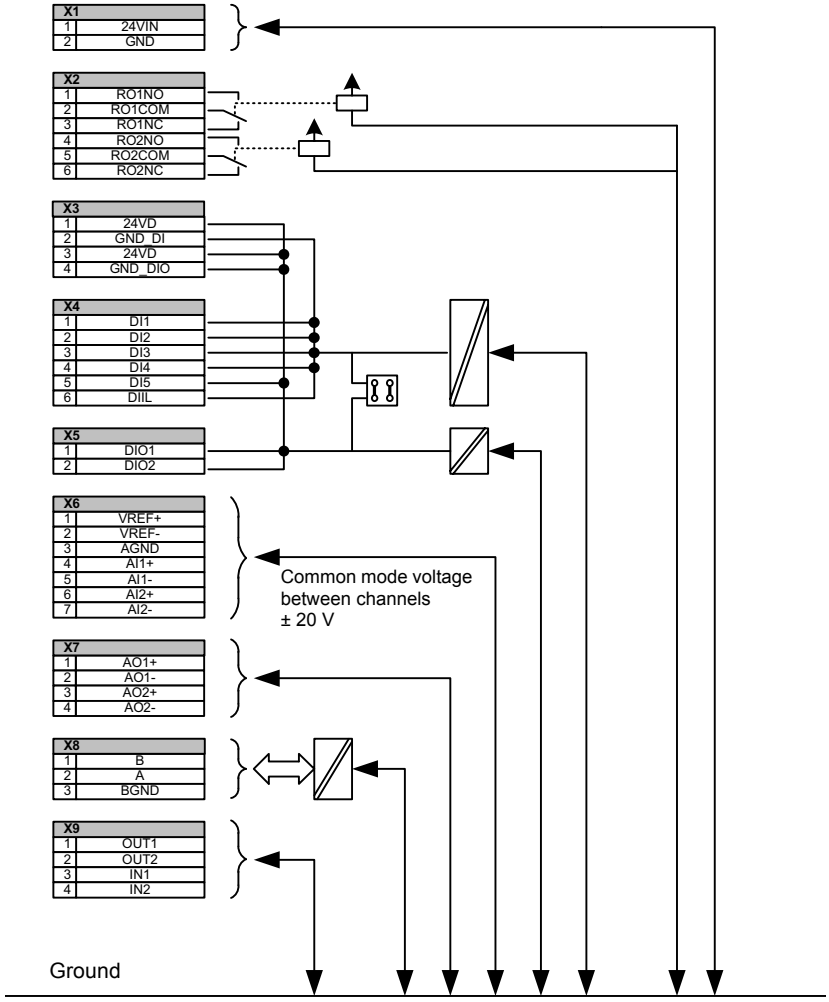

Efficiency

Approximately 98% at nominal power level

Degree of protection

IP00 (UL type open)

Ambient conditions

Environmental limits for the drive are given below. The drive is to be used in a heated, indoor, controlled environment.

	Operation installed for stationary use	**Storage** in the protective package	**Transportation** in the protective package
Installation site altitude	0 to 4000 m (13123 ft) above sea level (above 1000 m [3281 ft]), see pages *106* and *68*.)	-	-
Air temperature	-15 to +50 °C (5 to 122 °F). No frost allowed. See section *Ratings*.	-40 to +70 °C (-40 to +158 °F)	-40 to +70 °C (-40 to +158 °F)
Relative humidity	5 to 95%	Max. 95%	Max. 95%
	No condensation allowed. Maximum allowed relative humidity is 60% in the presence of corrosive gases.		
Contamination levels (IEC 60721-3-3, IEC 60721-3-2, IEC 60721-3-1)	No conductive dust allowed.		
	Boards with coating: Chemical gases: Class 3C2 Solid particles: Class 3S2	**Boards with coating:** Chemical gases: Class 1C2 Solid particles: Class 1S3	**Boards with coating:** Chemical gases: Class 2C2 Solid particles: Class 2S2
Atmospheric pressure	70 to 106 kPa 0.7 to 1.05 atmospheres	70 to 106 kPa 0.7 to 1.05 atmospheres	60 to 106 kPa 0.6 to 1.05 atmospheres
Vibration (IEC 60068-2)	Max. 1 mm (0.04 in.) (5 to 13.2 Hz), max. 7 m/s^2 (23 ft/s^2) (13.2 to 100 Hz) sinusoidal	Max. 1 mm (0.04 in.) (5 to 13.2 Hz), max. 7 m/s^2 (23 ft/s^2) (13.2 to 100 Hz) sinusoidal	Max. 3.5 mm (0.14 in.) (2 to 9 Hz), max. 15 m/s^2 (49 ft/s^2) (9 to 200 Hz) sinusoidal
Shock (IEC 60068-2-29)	Not allowed	Max. 100 m/s^2 (330 ft./s^2), 11 ms	Max. 100 m/s^2 (330 ft./s^2), 11 ms
Free fall	Not allowed	100 mm (4 in.) for weight over 100 kg (220 lb)	100 mm (4 in.) for weight over 100 kg (220 lb)

Materials

Drive enclosure	• PC/ABS 2.5 mm, color NCS 1502-Y (RAL 90021 / PMS 420 C) • hot-dip zinc coated steel sheet 1.5 to 2.5 mm, thickness of coating 100 micrometers, color NCS 1502-Y
Package	Plywood and cardboard. Foam cushions PP-E, bands PP.
Disposal	The drive contains raw materials that should be recycled to preserve energy and natural resources. The package materials are environmentally compatible and recyclable. All metal parts can be recycled. The plastic parts can either be recycled or burned under controlled circumstances, according to local regulations. Most recyclable parts are marked with recycling marks. If recycling is not feasible, all parts excluding electrolytic capacitors and printed circuit boards can be landfilled. The DC capacitors (C1-1 to C1-x) contain electrolyte and the printed circuit boards contain lead, both of which are classified as hazardous waste within the EU. They must be removed and handled according to local regulations. For further information on environmental aspects and more detailed recycling instructions, please contact your local ABB distributor.

Applicable standards

The drive complies with the following standards. The compliance with the European Low Voltage Directive is verified according to standards EN 61800-5-1 and EN 60204-1.

EN 60204-1:2006	*Safety of machinery. Electrical equipment of machines. Part 1: General requirements*. *Provisions for compliance:* The final assembler of the machine is responsible for installing - emergency-stop device - supply disconnecting device - drive module into a cabinet.
IEC/EN 60529:1992	*Degrees of protection provided by enclosures (IP code)*
IEC 60664-1:2007	*Insulation coordination for equipment within low-voltage systems. Part 1: Principles, requirements and tests.*
EN 61800-3:2004	*Adjustable speed electrical power drive systems. Part 3: EMC requirements and specific test methods*
EN 61800-5-1:2003	*Adjustable speed electrical power drive systems. Part 5-1: Safety requirements – electrical, thermal and energy*
EN 61800-5-2:2007	*Adjustable speed electrical power drive systems. Part 5-2: Safety requirements – Functional*
UL 508C:2002	*UL Standard for Safety, Power Conversion Equipment, second edition*
NEMA 250:2003	*Enclosures for Electrical Equipment (1000 Volts Maximum)*
CSA C22.2 No. 14-05	*Industrial control equipment*

CE marking

A CE mark is attached to the drive module to verify that the unit follows the provisions of the European Low Voltage and EMC Directives.

Compliance with the European Low Voltage Directive

The compliance with the European Low Voltage Directive has been verified according to standards EN 61800-5-1 and EN 60204-1.

Compliance with the European EMC Directive

The EMC Directive defines the requirements for immunity and emissions of electrical equipment used within the European Union. The EMC product standard (EN 61800-3:2004) covers requirements stated for drives. See section *Compliance with the EN 61800-3:2004* below.

Compliance with the European Machinery Directive

The drive module complies with the European Union Machinery Directive requirements for an equipment intended to be incorporated into machinery.

“C-tick” marking

“C-tick” marking is required in Australia and New Zealand. A “C-tick” mark is attached to each drive in order to verify compliance with the relevant standard (IEC 61800-3:2004, *Adjustable speed electrical power drive systems – Part 3: EMC product standard including specific test methods*), mandated by the Trans-Tasman Electromagnetic Compatibility Scheme.

For fulfilling the requirements of the standard, see section *Compliance with the EN 61800-3:2004* below.

Compliance with the EN 61800-3:2004

Definitions

EMC stands for **E**lectro**m**agnetic **C**ompatibility. It is the ability of electrical/electronic equipment to operate without problems within an electromagnetic environment. Likewise, the equipment must not disturb or interfere with any other product or system within its locality.

First environment includes establishments connected to a low-voltage network which supplies buildings used for domestic purposes.

Second environment includes establishments connected to a network not supplying domestic premises.

Drive of category C2: drive of rated voltage less than 1000 V and intended to be installed and commissioned only by a professional when used in the first environment. **Note:** A professional is a person or organization having necessary skills in installing and/or commissioning power drive systems, including their EMC aspects.

Drive of category C3: drive of rated voltage less than 1000 V and intended for use in the second environment and not intended for use in the first environment.

Drive of category C4: drive of rated voltage equal to or above 1000 V, or rated current equal to or above 400 A, or intended for use in complex systems in the second environment.

Category C3

The drive complies with the standard with the following provisions:

1. The motor and control cables are selected as specified in the *Hardware manual*.
2. The drive is installed according to the instructions given in the *Hardware manual*.
3. Maximum cable length is 100 metres.

WARNING! A drive of category C3 is not intended to be used on a low-voltage public network which supplies domestic premises. Radio frequency interference is expected if the drive is used on such a network.

Category C4 (+0E200)

If the provisions under *Category C3* cannot be met, or the drive module is equipped with option +0E200 (no EMC filter), the requirements of the standard can be met as follows:

1. It is ensured that no excessive emission is propagated to neighboring low-voltage networks. In some cases, the inherent suppression in transformers and cables is sufficient. If in doubt, the supply transformer with static screening between the primary and secondary windings can be used.

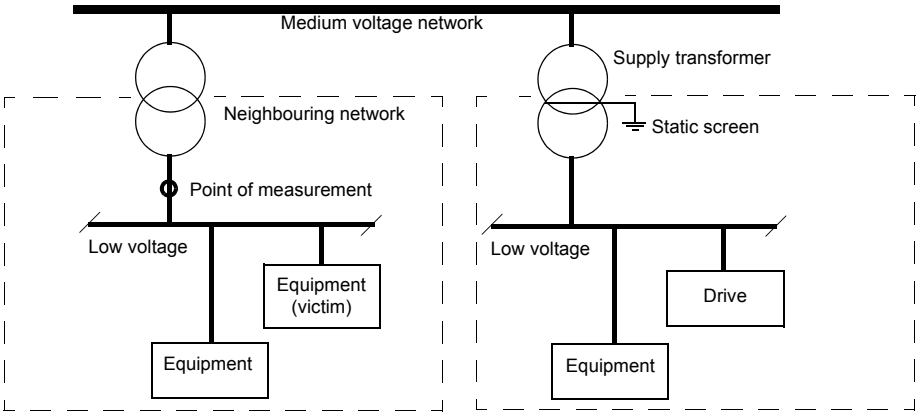

2. An EMC plan for preventing disturbances is drawn up for the installation. A template is available from the local ABB representative.
3. The motor and control cables are selected as specified in the *Hardware manual*.
4. The drive is installed according to the instructions given in the *Hardware manual*.

WARNING! A drive of category C4 is not intended to be used on a low-voltage public network which supplies domestic premises. Radio frequency interference is expected if the drive is used on such a network.

UL marking

The drive module is C-UL US Listed. The approval is valid with rated voltages.

UL checklist

- The drive module (IP00, UL Open Type) is to be used in a heated, indoor controlled environment. The drive must be installed in clean air according to enclosure classification. Cooling air must be clean, free from corrosive materials and electrically conductive dust. See page *116*.
- The maximum ambient air temperature is 40 °C (104 °F) at rated current. The current is derated for 40 to 50 °C (104 to 122 °F).
- The drive is suitable for use in a circuit capable of delivering not more than 100,000 rms symmetrical amperes, 500 V maximum. The ampere rating is based on tests done according to UL 508C.
- The cables located within the motor circuit must be rated for at least 75 °C (167 °F) in UL-compliant installations.
- The input cable must be protected with fuses. Circuit breakers must not be used without fuses in the USA. Suitable IEC (class gG and aR) fuses are listed on page *107* and UL (class T or L) fuses on page *110*. For suitable circuit breakers, contact your local ABB representative.
- For installation in the United States, branch circuit protection must be provided in accordance with the National Electrical Code (NEC) and any applicable local codes. To fulfill this requirement, use the UL classified fuses.
- For installation in Canada, branch circuit protection must be provided in accordance with the Canadian Electrical Code and any applicable provincial codes. To fulfill this requirement, use the UL classified fuses.
- The drive provides overload protection in accordance with the National Electrical Code (NEC).

CSA marking

The drive module is CSA marked. The approval is valid with rated voltages.

Patent protection in the USA

The drive module is protected by one or more of the following US patents. Other patens pending.

4,920,306	5,301,085	5,463,302	5,521,483	5,532,568	5,589,754
5,612,604	5,654,624	5,799,805	5,940,286	5,942,874	5,952,613
6,094,364	6,147,887	6,175,256	6,184,740	6,195,274	6,229,356
6,252,436	6,265,724	6,305,464	6,313,599	6,316,896	6,335,607
6,370,049	6,396,236	6,448,735	6,498,452	6,552,510	6,597,148
6,600,290	6,741,059	6,774,758	6,844,794	6,856,502	6,859,374
6,922,883	6,940,253	6,934,169	6,956,352	6,958,923	6,967,453
6,972,976	6,977,449	6,984,958	6,985,371	6,992,908	6,999,329
7,023,160	7,034,510	7,036,223	7,045,987	7,057,908	7,059,390
7,067,997	7,082,374	7,084,604	7,098,623	7,102,325	7,109,780
7,164,562	7,176,779	7,190,599	7,215,099	7,221,152	7,227,325
7,245,197	7,250,739	7,262,577	7,271,505	7,274,573	7,279,802
7,280,938	7,330,095	7,349,814	7,352,220	7,365,622	7,372,696
7,388,765	7,408,791	7,417,408	7,446,268	7,456,615	7,508,688
7,515,447	7,560,894	D503,931	D510,319	D510,320	D511,137
D511,150	D512,026	D512,696	D521,466	D541,743S	D541,744S
D541,745S	D548,182S	D548,183S	D573,090S		

13

Dimension drawings

What this chapter contains

This chapter contains dimension drawings of the drive modules as well as auxiliary components.

Frame without pedestal (mm)

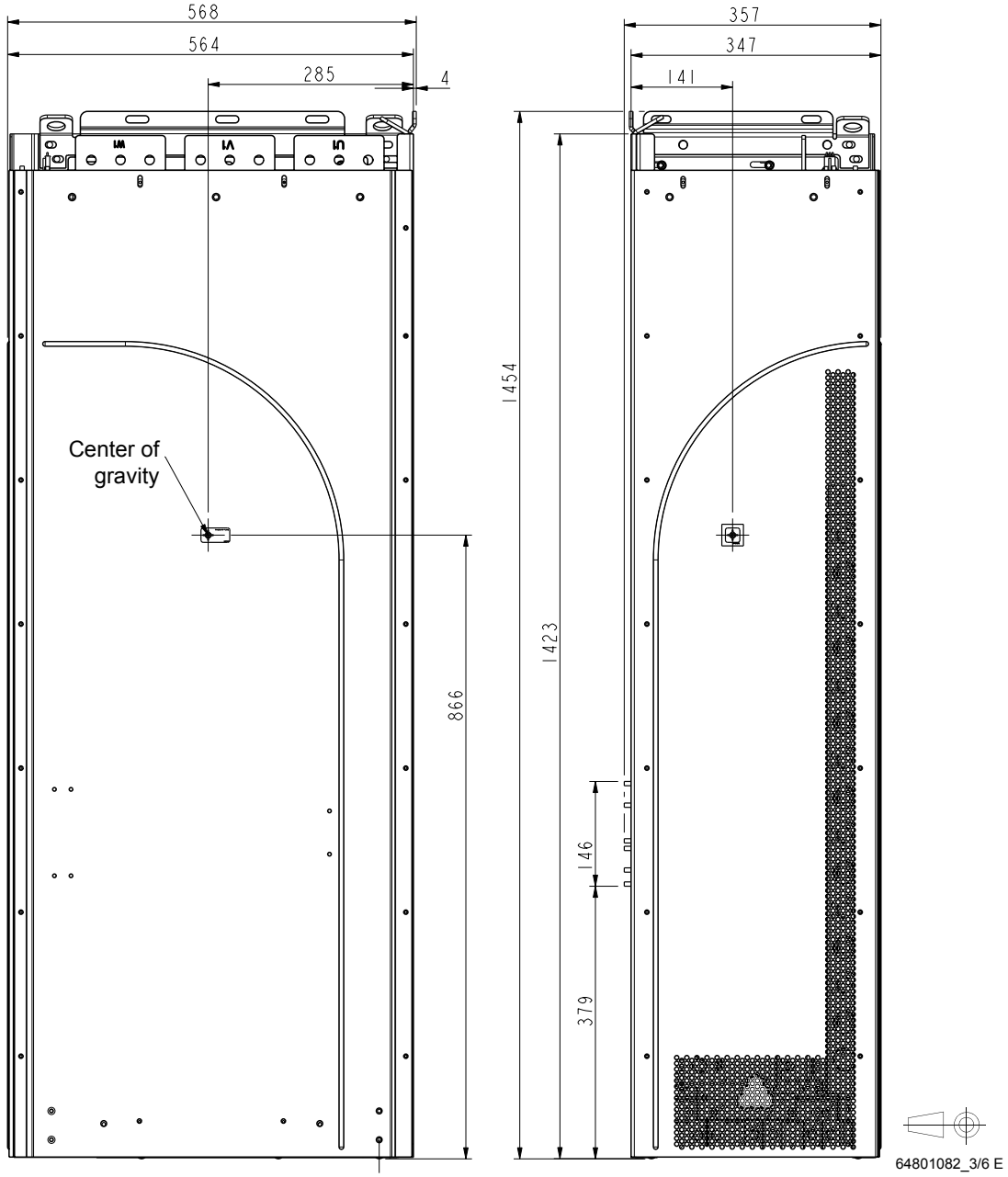

Frame with busbars on the left side (mm)

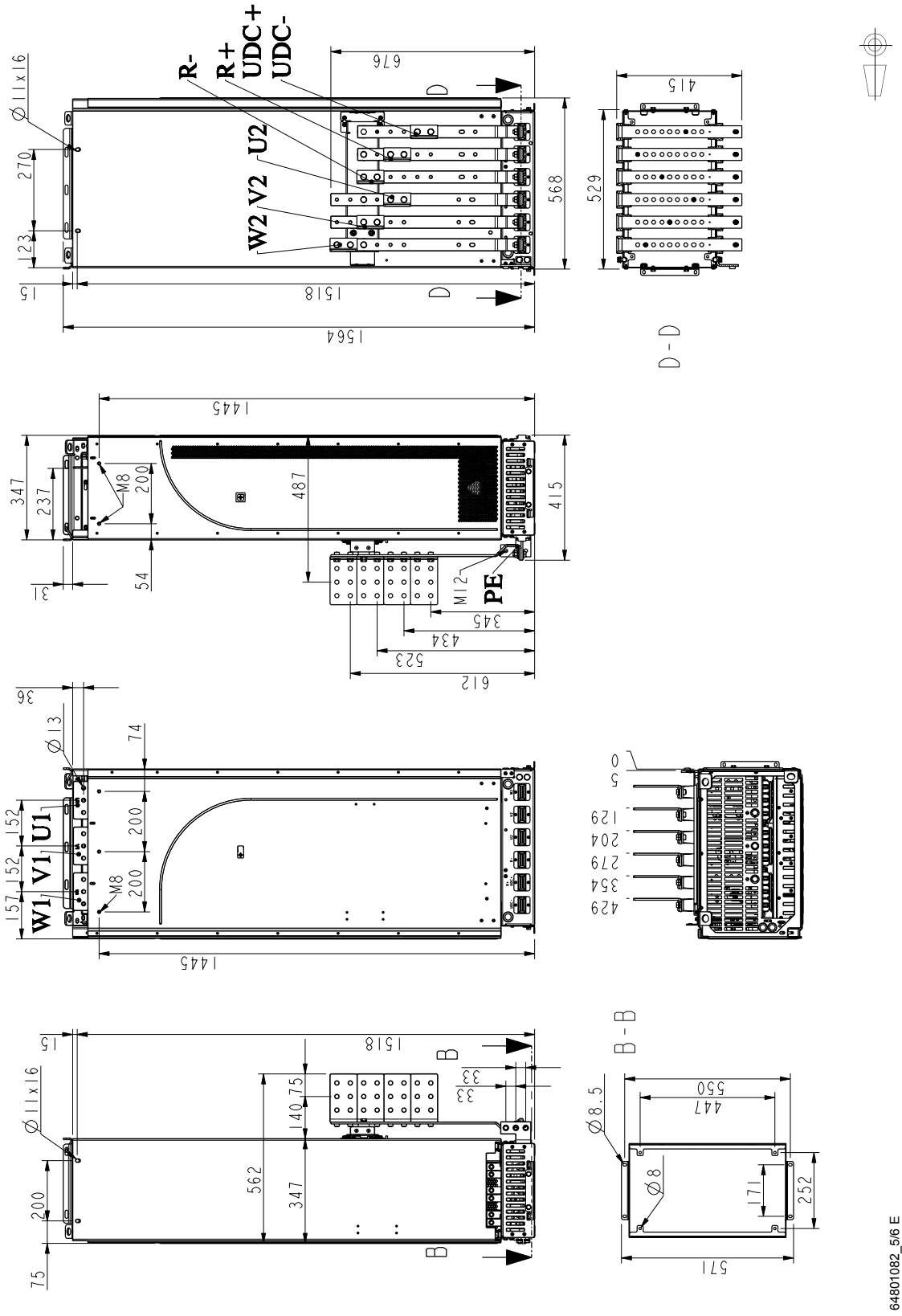

Drive control unit (JCU)

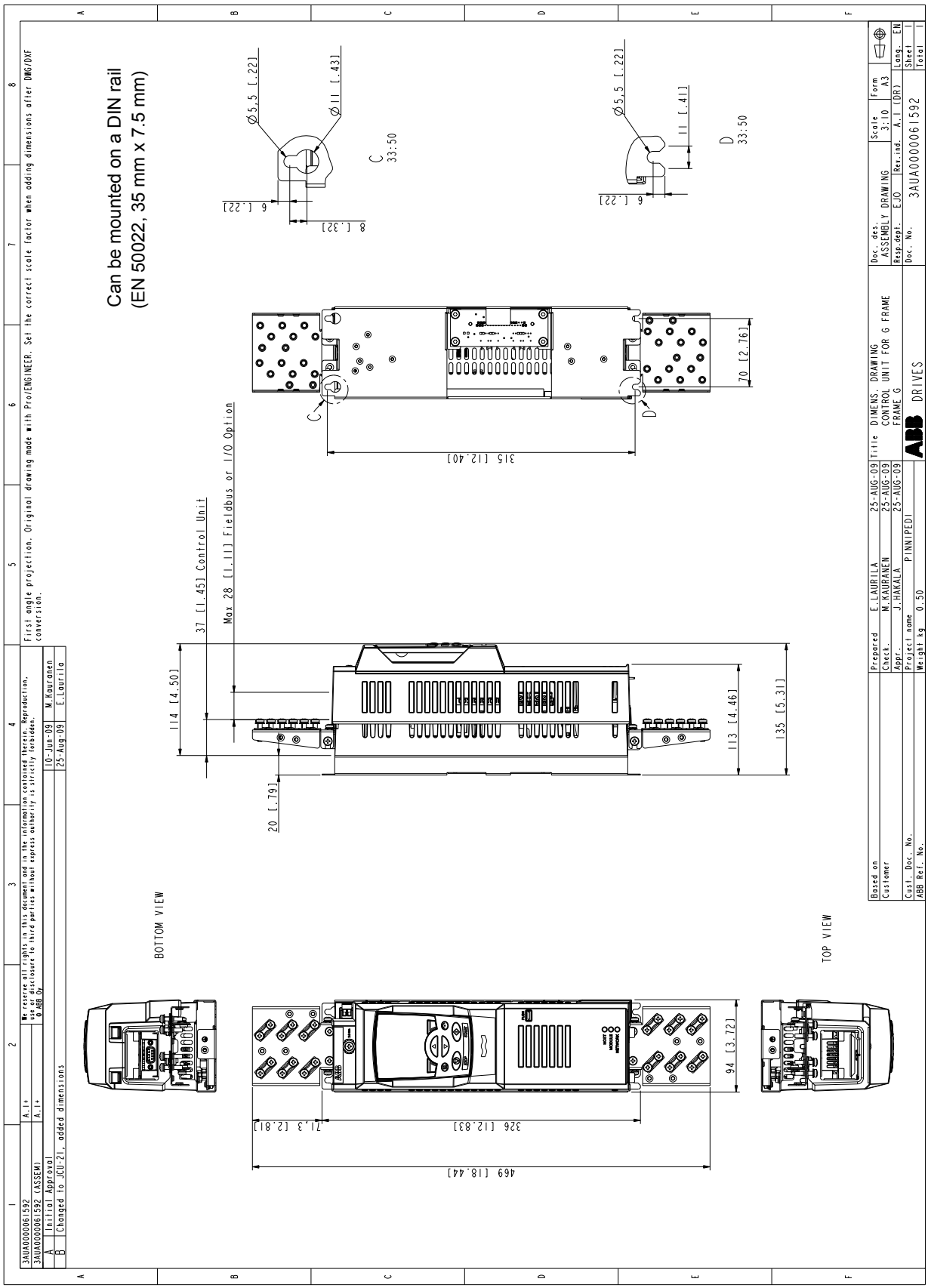

Package

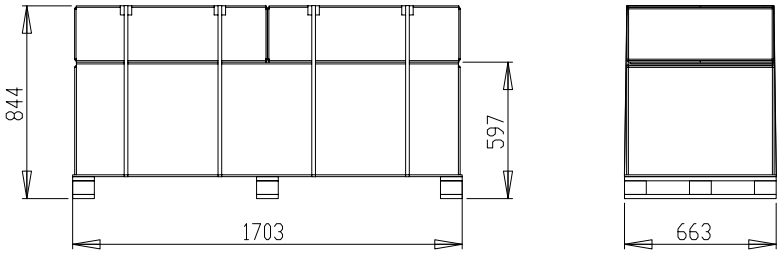

Dimension drawings (USA)

Frame without pedestal (inches)

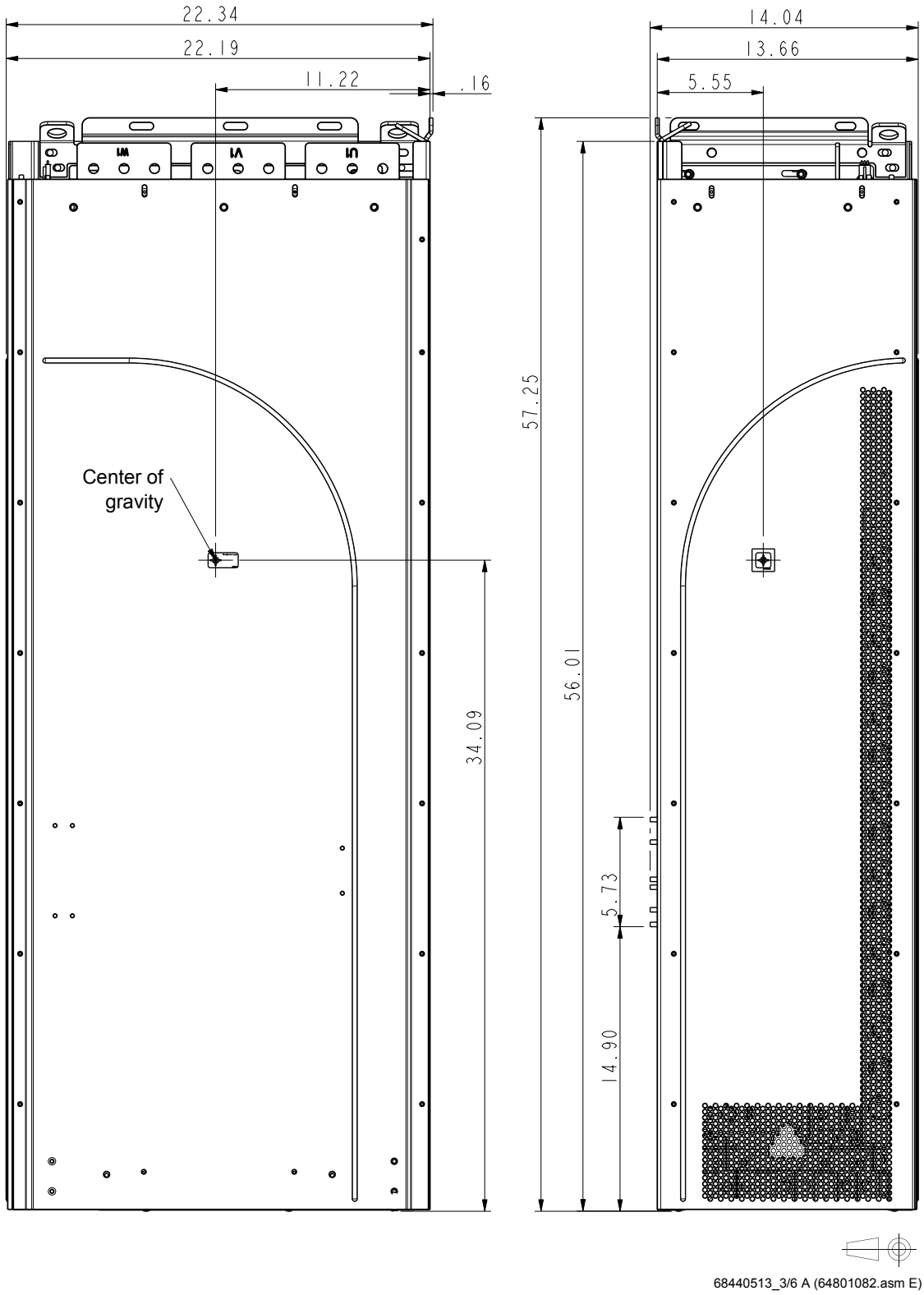

Frame with busbars on the left side (inches)

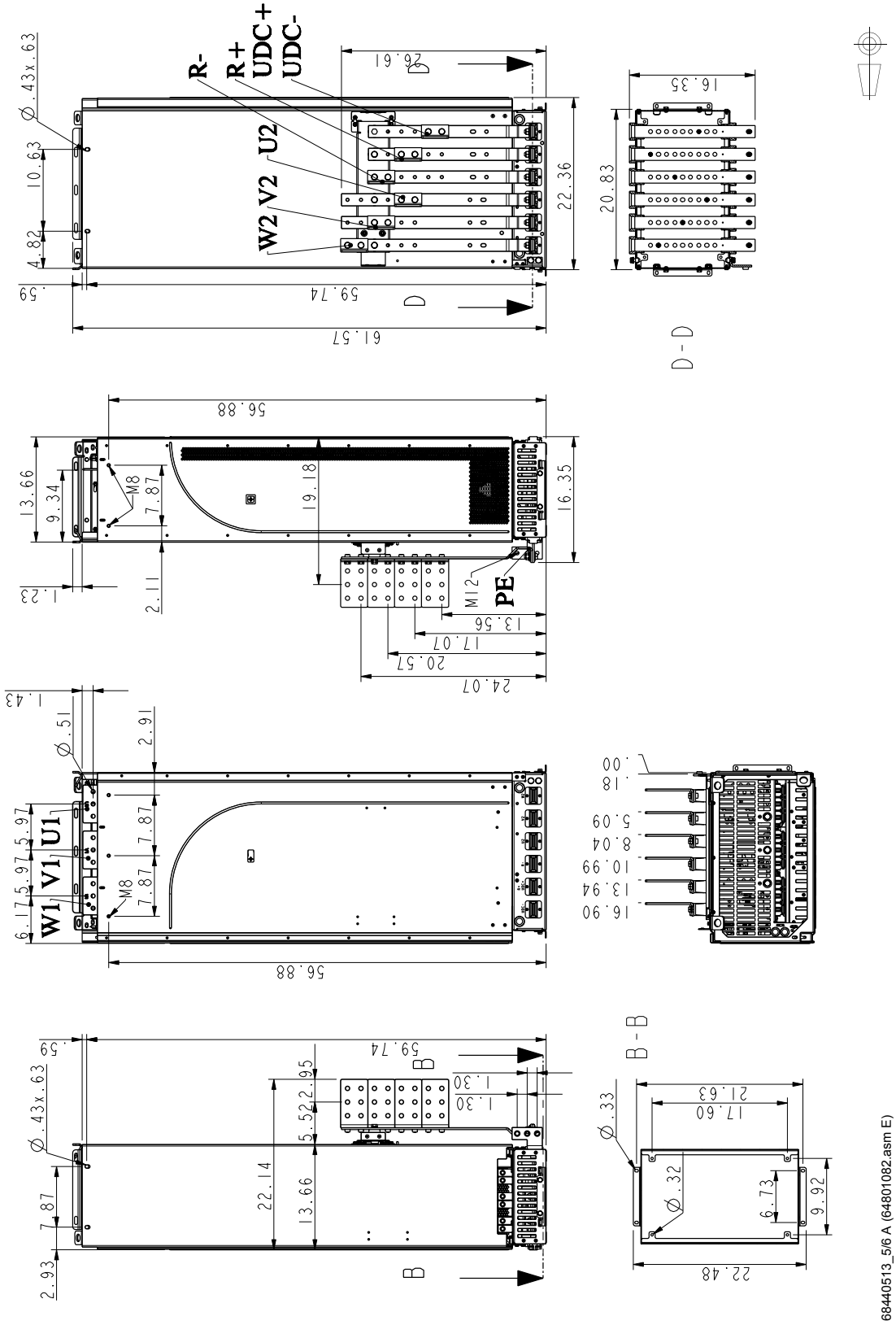

14

Example circuit diagrams

What this chapter contains

This chapter shows an example circuit diagram for a cabinet-installed drive module.

Example circuit diagram

This diagram is an example for the main wiring of a drive cabinet. Note that the diagram includes components which are not included in a basic delivery (* other than plus code options, ** to be acquired by the customer).

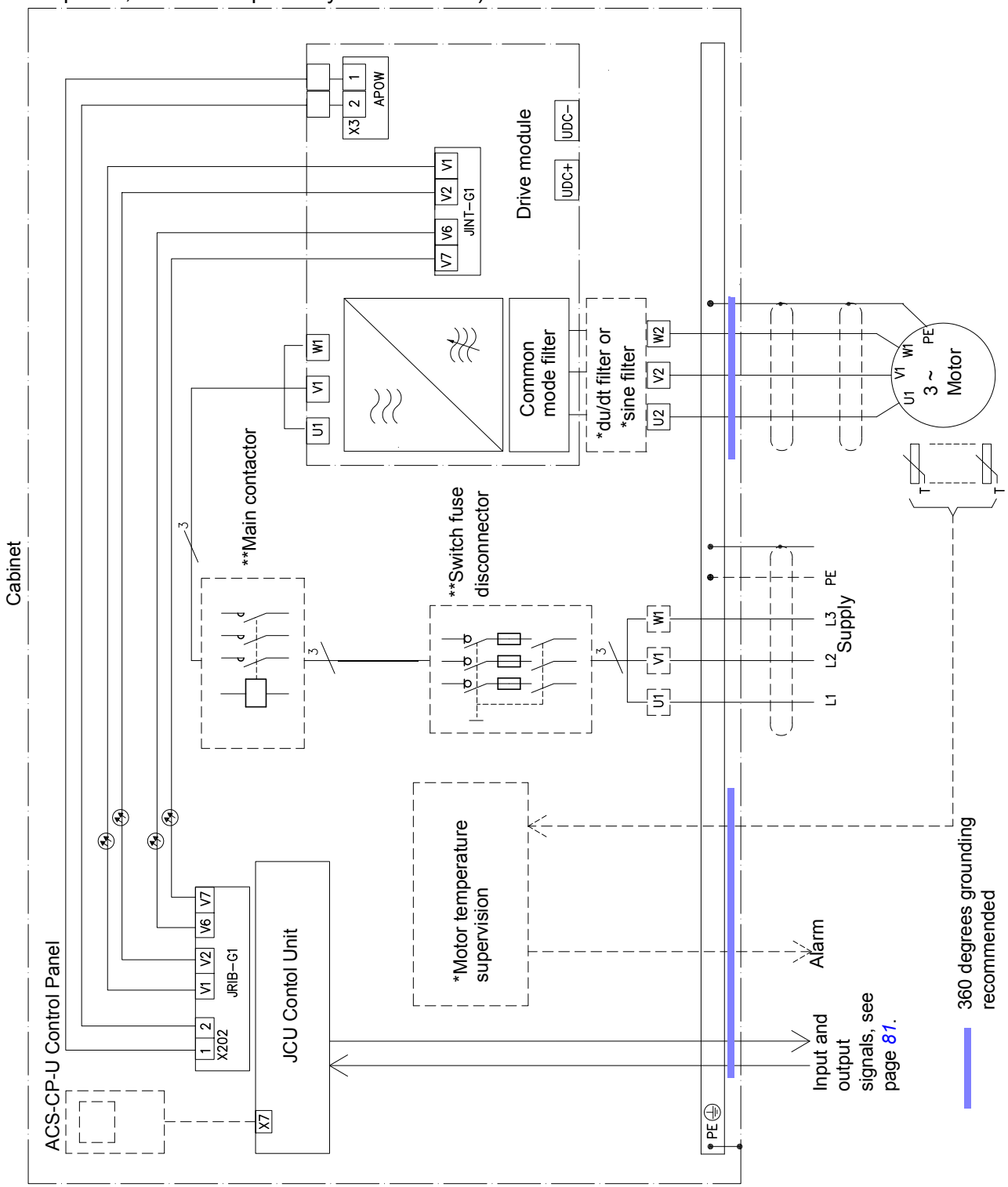

15

du/dt filters and sine filters

What this chapter contains

This chapter describes how to select du/dt filters for the drive.

du/dt filters

When is du/dt filter needed?

See section *Checking the compatibility of the motor and drive*, page *58*.

Selection table

du/dt filter types for the drive module types are given below.

Drive type	du/dt filter type
ACQ810-04-302A-4	FOCH-0320-50
ACQ810-04-361A-4	FOCH-0320-50
ACQ810-04-414A-4	FOCH-0320-50
ACQ810-04-477A-4	FOCH-0610-70
ACQ810-04-550A-4	FOCH-0610-70
ACQ810-04-616A-4	FOCH-0610-70
ACQ810-04-704A-4	FOCH-0610-70

00581898

Description, installation and technical data of the FOCH filters

See *FOCH du/dt Filters Hardware Manual* (3AFE68577519 [English]).

Sine filters

Contact your local ABB representative.

Further information

Product and service inquiries

Address any inquiries about the product to your local ABB representative, quoting the type designation and serial number of the unit in question. A listing of ABB sales, support and service contacts can be found by navigating to www.abb.com/drives and selecting *Sales, Support and Service network*.

Product training

For information on ABB product training, navigate to www.abb.com/drives and select *Training courses*.

Providing feedback on ABB Drives manuals

Your comments on our manuals are welcome. Go to www.abb.com/drives and select *Document Library – Manuals feedback form (LV AC drives)*.

Document library on the Internet

You can find manuals and other product documents in PDF format on the Internet. Go to www.abb.com/drives and select *Document Library.* You can browse the library or enter selection criteria, for example a document code, in the search field.

Contact us

ABB Oy
Drives
P.O. Box 184
FI-00381 HELSINKI
FINLAND
Telephone +358 10 22 11
Fax +358 10 22 22681
www.abb.com/drives

ABB Inc.
Automation Technologies
Drives & Motors
16250 West Glendale Drive
New Berlin, WI 53151
USA
Telephone 262 785-3200
800-HELP-365
Fax 262 780-5135
www.abb.com/drives

ABB Beijing Drive Systems Co. Ltd.
No. 1, Block D, A-10 Jiuxianqiao Beilu
Chaoyang District
Beijing, P.R. China, 100015
Telephone +86 10 5821 7788
Fax +86 10 5821 7618
www.abb.com/drives

3AUA0000055155 Rev A EN 2009-09-15

Power and productivity
for a better world™